installation and servicing

imax plus III

Your Ideal installation and servicing guide

See reverse for imax plus III users guide

Models F95, F145, F190 & F235, F285, F330

When replacing any part on this appliance, use only spare parts that you can be assured conform to the safety and performance specification that we require. Do not use reconditioned or copy parts that have not been clearly authorised by Ideal Boilers.

March 2009 UIN 204111 A02

Ideal BOILERS
The High Efficiency Pioneers

Warning: this manual contains instructions to be used exclusively by the installer and/or a competent person in accordance with the current laws in force.
The end user MUST not make any alterations to the boiler.
Failure to follow the instructions indicated in this manual, which is supplied with the boiler, could cause injury to persons, animals or damage to property. Ideal Boilers shall not be held liable for any injury and/or damage.

CONTENTS

1 GENERAL INFORMATION ... 3
1.1 Symbols used in this guide ... 3
1.2 Correct use of the appliance ... 3
1.3 Water treatment ... 3
1.4 Information to be passed over to the person in charge of the appliance ... 3
1.5 Safety warnings ... 4
1.6 Data badge ... 5
1.7 General warnings ... 6

2 TECHNICAL FEATURES AND DIMENSIONS ... 7
2.1 Technical features ... 7
2.2 Dimensions ... 8
2.3 Performance data ... 9
2.4 RHS view showing main components ... 10

3 INSTRUCTIONS FOR THE INSTALLER ... 11
3.1 General warnings ... 11
3.2 Installation standards ... 12
3.3 Packaging ... 13
3.4 Boiler location in a boiler room ... 13
3.5 Installation on existing systems ... 14
3.6 Boiler connection ... 15
3.7 Gas connection ... 16
3.8 Connection return and flow system pipes ... 17
3.9 Primary circuit pump or boiler pump ... 18
3.10 Sealed system requirements ... 19
3.11 Wiring diagram for additional safety devices ... 20
3.12 Safety pressure relief valve ... 20
3.13 Mixing header filter ... 21
3.14 Boiler freeze protection ... 22
3.15 Mixing header ... 22
3.16 Condensing drain ... 23
3.17 Water treatment ... 24
3.18 Flue chimney connection ... 25
3.19 Room sealed version ... 25
3.20 Operation ... 27
3.21 Electrical connections ... 29
3.22 Functional wiring diagram ... 30
3.23 Wiring diagram for connection and managing ... 32
3.24 Installation examples (functional wiring and connections description) ... 34
Connections for boilers in cascade, controlled by outer compensators ... 36
3.25 Cascade manager BCM ... 38
3.26 Configuration with a modulating pump ... 42
3.27 Filling the system ... 43
3.28 Burner adjustment ... 44
3.29 Emergency functions ... 45
3.30 Lighting and shutting down procedures ... 46

4 SERVICING SCHEDULE ... 47

1 GENERAL INFORMATION

1.1 - SYMBOLS USED IN THIS GUIDE

When reading this guide particular care has to be given to the parts marked with the followings symbols:

DANGER!
Indicates serious danger for your personal safety and for your life

WARNING!
Indicates a potentially dangerous situation for the product and the environment

NOTE!
Suggestions for the user

1.2 - CORRECT USE OF THE APPLIANCE

The Imax Plus appliance has been designed utilizing today's heating technology and in compliance with the current safety regulations.However, following an improper use, dangers could arise for the safety and life of the user or of other people, or damage could be caused to the appliance or other objects.The appliance is designed to be used in pumped hot water central heating systems. Any other use of this appliance will be considered improper. Ideal Boilers declines any responsibility for any damage or injuries caused by an improper use; in this case the risk is completely at the user's responsibility. In order to use the appliance according to the scopes it was designed for it is essential to carefully follow the instructions indicated in this guide.

1.3 - WATER TREATMENT

- The Imax Plus III boiler has an Aluminium alloy heat exchanger.
- Ideal Boilers strongly recommends the system is thoroughly cleaned prior to the use of a suitable inhibitor.

  For further details see section 3.17.

1.4 - INFORMATION TO BE HANDED OVER TO THE USER

The user has to be instructed on the use and operation of his heating system, in particular:

- Hand over these instructions to the end user, together with any other literature regarding this appliance, placed inside the envelope contained in the packaging. **The user has to keep these documents in a safe place in order to always have them at hand for future reference.**
- Inform the user on the importance of air vents and of the flue outlet system, stressing the fact that is absolutely forbidden to make any alterations to the boiler.
- Inform the user how to check the system's water pressure as well as informing him how to restore the correct pressure.
- Explain the function of time and temperature controls, thermostats, heating controls and radiators, to ensure the greatest possible fuel economy.
- Remind the user that the appliance should be serviced annually by a Gas Safe Registered Engineer or in IE by a Registered Gas Installer (RGII).
- If the appliance is sold or transferred to another owner or if the present user moves home and leaves the appliance installed, ensure yourself that the manual always follows the appliance so that it can be consulted by the new owner and/or installer.

Failure to follow the instructions indicated in this guide, which is supplied with the boiler, could cause injury to persons, animals or damage to property. The manufacturer shall not be held liable for any such injury and/or damage.

1.5 - SAFETY WARNINGS

WARNING!
The installation, adjustment, and servicing of this appliance must be carried out by a competent person and installed in accordance with the current standards and regulations. Failure to correctly install this appliance could cause injury to persons, animals or damage to property. The manufacturer shall not be held liable for any injury and/or damage.

DANGER!
Servicing or repairs of the appliance must be carried out by a Gas Safe Registered Engineer or in IE by a Registered Gas Installer (RGII). Ideal Boilers recommends drawing up a service contract. Bad or irregular servicing could compromise the safe operation of the appliance, and could cause injury to persons, animals or damage to property for which Ideal Boilers shall not be held liable.

Modifications to parts connected to the appliance
Do not carry out any modifications to the following parts:
- the boiler
- to the gas, air, water supply pipes and electrical current
- to the flue pipe, safety relief valve and its drainage pipe
- to the constructive components which influence the appliance's safe operation

WARNING!
When tightening or loosening the screw pipe connections, use only adequate fork spanners.
The improper use and/or the use of inadequate equipment can cause damage (for example water or gas leakages).

Smell of gas
If you smell gas follow these safety indications:
- Do not turn on or off electrical switches
- Do no smoke
- Do not use the telephone
- Close the main gas tap
- Open all windows and doors where the gas leakage has occurred
- Inform the gas society or a company specialized in installing and servicing heating systems

Explosive and easily inflammable substances

Do not use or leave explosive or easily inflammable material (as for example: petrol, paint, paper) in the room where the appliance has been installed.

WARNINGS

The boiler has to be installed in such way as to avoid, under the expected operation conditions, the freezing of the water and to prevent the control devices being exposed to a temperature lower than -15°C and higher than 40°C.
The boiler has to be protected against environmental variations with:
- The insulation of the hydraulic pipelines and the condensate evacuation
- The adoption of specific antifreeze products in the C.H. installation.

1.6 - DATA PLATE

CE Marking

The CE marking documents that the boilers satisfy:

- The essential requirements of the Directive regarding gas appliances (Directive 90/396/CEE)
- The essential requirements of the Directive regarding electromagnetic compatibility (Directive 89/336/CEE)
- The essential requirements of the Efficiency Directive (Directive 92/42/CEE)
- The essential requirements of the low voltage Directive (Directive 73/23/CEE)

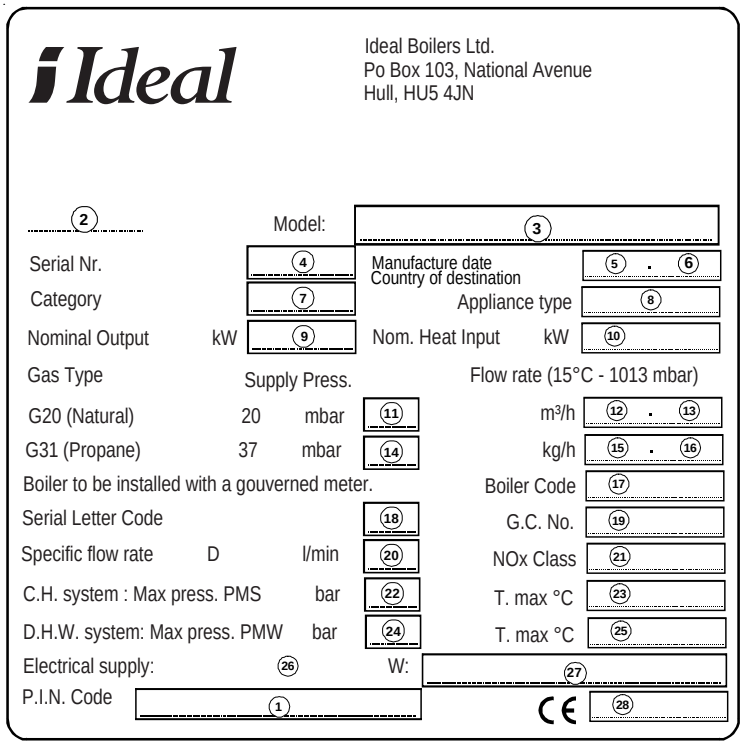

1 = P.I.N. code
2 = Boiler type
3 = Model
4 = Serial Nr.
5 = Manufacture date
6 = Country of destination
7 = Gas category
8 = Appliance type
9 = Nominal heat output
10 = Nominal heat input
11 = Adjusted for gas type X
12 = Gas flow rate (min)
13 = Gas flow rate (max)
14 = Adjusted for gas type X
15 = Gas flow rate (min)
16 = Gas flow rate (max)
17 = Boiler code
18 = Serial letter code
19 = Gas Council No.
20 = Specific flow rate
21 = NOx class
22 = C.H. system max press PMS
23 = C.H. flow temp (max)
24 = Not applicable
25 = Not applicable
26 = Electrical supply
27 = Maximum absorbed power
28 = Protection rating
29 = CE no.

1.7 - GENERAL WARNINGS

This instruction manual is an integral and indispensable part of the product and must be retained by the person in charge of the appliance.

Please read carefully the instructions contained in this manual as they provide important indications regarding the safe installation, use and servicing of this appliance.

Keep this manual in a safe place for future reference.

The installation and servicing must be carried out in accordance with the regulations in force according to the manufacturer's instructions and by a Gas Safe Registered Engineer or, in IE, by a Registered Gas Installer (RGII).

Bad or irregular servicing could compromise the safe operation of the appliance, and could cause injury to persons, animals or damage to property. The manufacturer shall not be held liable for any such injury and/or damage.
Before carrying out any cleaning or servicing turn off the electrical supply to the boiler by means of the ON/OFF switch and/or by means of the appropriate shutdown devices.

Do not obstruct the intake/outlet terminal ducts.

In the event of failure and/or faulty functioning of the appliance, switch off the boiler. Do not attempt to make any repairs: contact qualified technicians.

Any repairs must be carried out a Gas Safe Registered Engineer or, in IE, by a Registered Gas Installer (RGII) using only original spare parts.
Non-observance of the above requirement may jeopardize the safety of the appliance.

To guarantee the efficiency and correct functioning of the appliance the boiler should be serviced annually by a qualified person.

If the boiler remains unused for long periods, ensure that any dangerous parts are rendered innocuous.

Only original accessories must be used for all appliances supplied with optionals or kits (including electrical ones).
This appliance must be used only for the purposes for which it has been expressively designed. Any other use shall be considered incorrect and therefore dangerous.

SAFETY
Current Gas Safety (Installation and Use) Regulations or rules in force.It is the law the that all gas appliances are installed and serviced by a Gas Safe Registered Engineer, or in IE, by a Registered Gas Installer (RGII) in accordance with the regulations below.
Failure to install appliances correctly could lead to prosecution. It is in your own interest, and that of safety, to ensure the law is complied with.

The installation of the boiler MUST also be in accordance with the latest I.E.E. (BS7671) Wiring Regulations, local buildings regulations, bye-laws of the local water authority, the building regulations and the Building Standards (Scotland) and any relevant requirements of the local authority.

Detailed recommendations are contained in the following codes of practice:

BS 5854	Flues and Flue Structures in Buildings.
BS.6644	Installation of gas fired hot water boilers of rated inputs between 70kW and 1.8MW (net) (2nd and 3rd family gases).
BS.6880	Low temperature hot water heating systems of output greater than 45kW. Part 1 Fundamental and design considerations. Part 2 Selection of equipment. Part 3 Installation, commissioning andmaintenance.
73/23	EECLow Voltage Directive (Relevant Standard is EN60335.1).
89/336 EEC	Electro Magnetic Compatibility Directive.
IGE/UP/1	Soundness testing and purging of industrial and commercial gas installations.
IGE/UP/2	Gas installation pipework, boosters and compressors on industrial and commercial premises.
IGE/UP/10	Installation of gas appliances in industrial and commercial premises.

2 TECHNICAL FEATURES AND DIMENSIONS

2.1 - TECHNICAL FEATURES

- Imax Plus is a compact, gas fired, Low NO_x, condensing boiler, made up of one sectional boiler body,
  This boiler body consists of two or more modules (from 2 to 7), which cannot be separated from each other, being under the same protecting casing, and are set to operate separately or in cascade. These modules are connected to a single flue exhaust manifold and are controlled by a single microprocessor, which manages completely the temperatures from the point of view of both operation and safety.
- Efficiency at full load with temperature 30/50°C = 101%. At part load (30% of the nominal) with 30°C return temperature = 106.8%.
- Each module is composed of a combustion chamber, metallic fiber pre-mix burner, modulating fan, gas valve, ignition electrode, flame detection, NTC sensor for management control (BMM), local temperature control and safety thermostat.
- Each single boiler is equipped with NTC sensors for global temperature control on the flow and return manifolds.
- Integral, non allergic, synthetic wool insulation.
- Fully pre-mixed, radiating, modulating, metallic sponge burner, automatic no return diaphragm for separation from combustion chamber.
- Combustion air intake system from boiler house (type B 23 appliances) or directly from outside the boiler house, via an air duct (type C 63 appliances)
- Nominal input, per module: max. 48 kW, min. 12 kW.
- Noise level at maximum output: lower than 49 dBA.
- Modules configuration possibilities:
- Possible cascade installation of 2 or more Imax Plus
- Heating Operation: setting of instantaneous output by a main microprocessor, with a comparison parameters presetting between the requested temperature (or calculated by the outer compensator) and the global flow temperature.
- Logic of operation:
  A) Output sharing on as many modules as possible at min. load (down to 12 kW) for the max. efficiency..
  B) Automatic operation hour splitting-up system for each module to guarantee the best homogeneous use.
  C) D.H.W. production, via a storage tank loading pump or a three way diverting valve, controlled by a priority sensor through the E8 heating controller.
  D) Output check of each module for any calibration and/or assistance by secret access code.

Thermal element No.	Model	Input range kW	Modulation ratio
2	95	12 to 96 kW	1:8 (100 to 12,5%)
3	145	12 to 144 kW	1:12 (100 to 8,3%)
4	190	12 to 192 kW	1:16 (100 to 6,3%)
5	235	12 to 240 kW	1:20(100 to 5,0%)
6	285	12 to 288 kW	1:24 (100 to 4,2%)
7	330	12 to 336 kW	1:28 (100 to 3,6%)

- Possibility of controlling the output of each single module.
- Heating request control: temperature set point and modulation level.
- Monitoring of boiler and temperature status.
- Alarm control.
- Parameters setting.
- Relay for control of the operation of a pump at constant flow rate.
- 0-10V analogical output for control of a modulating pump.
- Emergency operation: it avoids C.H. system shut down caused by an interruption in communication with the boiler plant's automation system: : (in case of remote control of the complete boiler house):
- Input for "Constant setpoint": 55°C, maximum output 50%.
- Alarm reset input.
- Alarm relay signal.
- Gas connecting pipes, flow/return water pipes, arranged for any connection (by the opposite end).
- Integral easily removable panel set (painted steel panels).
- Flue exhaust pipe, adjustable on the right, the left and behind the heating system.
- Condensate collecting tank equipped with drain trap and stainless steel flue chamber.
- Built-in air vent.
- Weights and dimensions are limited (see table at par. 1.2).

SENSORS supplied with the boiler:
- outdoor temperature sensor
- flow temperature sensor for mixed zone
- boiler temperature sensor
- D.H.W. storage temperature sensor

Optional accessories

- **Air inlet socket & blanking plate kit**
- **Condensate level harness (190-330 models LH or Rear flue) (see page 10).**
- **Cascade control-E8**
  Cascade control wall mounting kit

Technical features and dimensions

2.2 - DIMENSIONS

FRONT VIEW

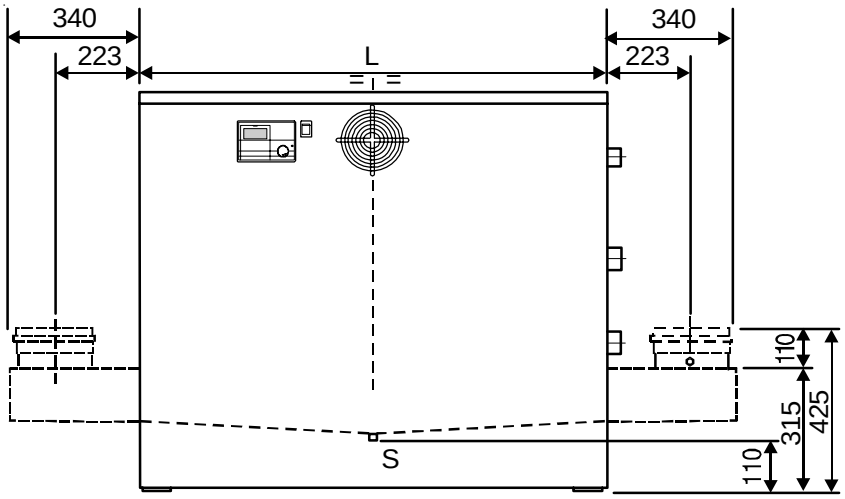

RIGHT HAND SIDE VIEW
(Delivery condition for R.H. side connection)

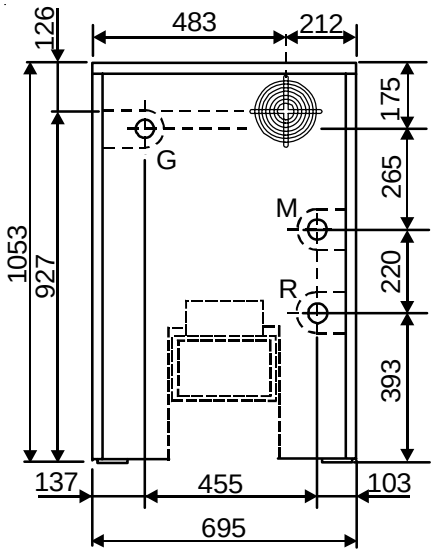

Warning:
Flow/Return connections (M / R) change their position whether they are on the R.H. or on the L.H. side of the boiler (see views).

LEFT HAND SIDE VIEW

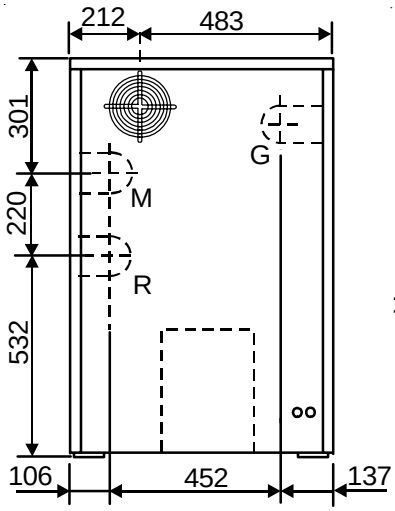

UPPER VIEW

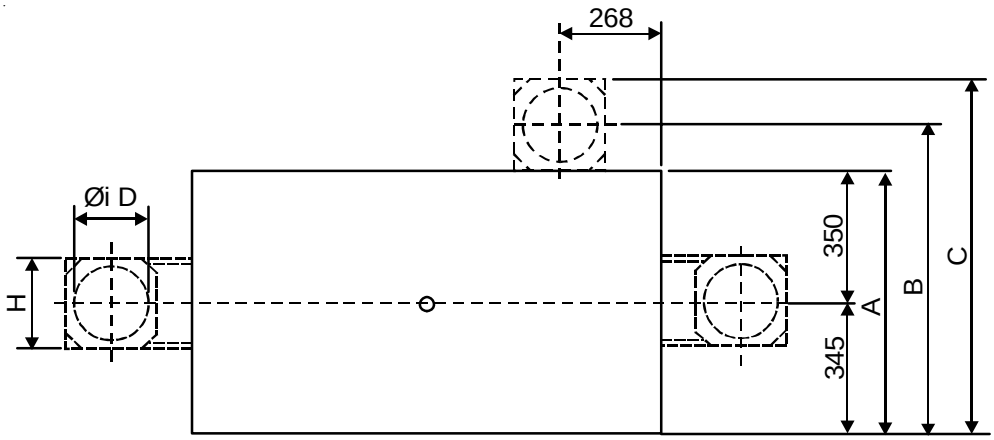

M ***CH flow system***
R ***CH safety system return***
G ***Gas inlet***
S ***Outlet condensate drain***

	Imax Plus	95	145	190	235	285	330
Dimension							
No. of Modules		2	3	4	5	6	7
Height	mm	1053	1053	1053	1053	1053	1053
Width "L"	mm	695	695	834	968	1102	1236
Depth "C"	mm	820	820	820	820	820	820
Depth "A"	mm	695	695	695	695	695	695
Depth "B"	mm	820	820	820	820	820	820
Connections							
Gas	mm (inch)	38(1½)	38(1½)	38(1½)	38(1½)	38(1½)	38(1½)
C.H. system Flow M	mm (inch)	50 (2)	50 (2)	50 (2)	50 (2)	50 (2)	50 (2)
C.H. system Return R	mm (inch)	50 (2)	50 (2)	50 (2)	50 (2)	50 (2)	50 (2)
Chimney connection "D"	mm	150	150	150	200	200	200
Chimney width "H"	mm	240	240	240	240	240	240
Condensate drain diameter	mm	40	40	40	40	40	40

2.3 - PERFORMANCE DATA

The Technical data plate is placed under the casing front panel next to the panel board.

BOILER TYPE	**Imax Plus**	**95**	**145**	**190**	**235**	**285**	**330**
Appliance category	II2H3P						
Nominal Heat Input on P.C.I. *Qn*	kW	96	144	192	240	288	336
Minimum Heat Input on P.C.I. *Qmin*	kW	12	12	12	12	12	12
Nominal Output (Tr 60 / Tm 80 °C) *Pn*	kW	93,22	140,11	187,39	234,72	282,24	329,52
Minimum Output (Tr 60 / Tm 80 °C) *Pn min*	kW	11,23	11,23	11,23	11,23	11,23	11,23
Nominal Output (Tr 30 / Tm 50 °C) *Pcond*	kW	95,90	145,58	192,38	240,96	289,87	339,36
Minimum Output (Tr 30 / Tm 50 °C) *Pcond min*	kW	12,74	12,74	12,74	12,74	12,74	12,74
Efficiency at max. output (Tr 60 / Tm 80°C)	%	97,1	97,3	97,6	97,8	98	98,07
Efficiency at min. output (Tr 60 / Tm 80°C)	%	93,6	93,6	93,6	93,6	93,6	93,6
Efficiency at max. output (Tr 30 / Tm 50°C)	%	99,9	101,1	100,2	100,4	100,65	101
Efficiency at min. output (Tr 30 / Tm 50°C)	%	106,2	106,2	106,2	106,2	106,2	106,2
Efficiency at 30 % at part load (Tm 50°C)	%	103,2	103,2	103,2	103,2	103,2	103,2
Efficiency at 30 % at part load (Tr 30°C)	%	106,8	106,8	106,8	106,8	106,8	106,8
Efficiency Class acc. to Directive 92/42 CEE		4	4	4	4	4	4
Efficiency Class acc. to Directive 92/42 CEE (100%)	%	96,94	97,29	97,55	97,76	97,90	98,04
Efficiency Class acc. to Directive 92/42 CEE (30%)	%	94,91	95,44	95,82	96,13	96,35	96,55
Combustion efficiency at nominal load	%	97,5	97,6	97,8	97,8	97,9	98,1
Combustion efficiency at part load	%	98,48	98,48	98,48	98,43	98,48	98,43
Stand-by losses (Q min.)	%	4,88	4,88	4,88	4,88	4,88	4,83
Stand-by losses (Q nom.)	%	0,44	0,34	0,16	0,02	0,02	0,02
Flue gas temperature tf-ta (min)	°C	30,4	30,4	30,4	30,4	30,4	30,4
Flue gas temperature tf-ta (max)	°C	49,1	47,2	44,8	43,1	41,2	40,1
Flue gas mass flow rate (min)	kg/h	19,61	19,61	19,61	19,61	19,61	19,61
Flue gas mass flow rate (max)	kg/h	156,90	235,35	313,79	392,24	470,69	549,14
Excess of air λ	%	25,53	25,53	25,53	25,53	25,53	25,53
CO_2 (at min. output)	%	9,1	9,1	9,1	9,1	9,1	9,1
CO_2 (at max. output)	%	9,1	9,1	9,1	9,1	9,1	9,1
NO_X (value according EN 297/A3 + EN 483)	mg/kWh	49,15	49,15	49,15	49,15	49,15	49,15
NO_X class		5	5	5	5	5	5
Flue losses with burner in operation (min.)	%	1,52	1,52	1,52	1,52	1,52	1,52
Flue losses with burner in operation (max)	%	2,46	2,36	2,24	2,16	2,06	2,01
Flue losses with burner off	%	0,3	0,3	0,3	0,3	0,3	0,3
Min. water flow rate in CH circuit (ΔT 20°C)	l/h	4008	6025	8058	10265	12136	14169
Minimum pressure in CH circuit	bar	0,5	0,5	0,5	0,5	0,5	0,5
Maximum pressure in CH circuit	bar	6	6	6	6	6	6
Gas Consumption Natural gas G 20 (20 mbar) Qn	m^3/h	10,15	15,23	20,30	25,38	30,45	35,53
Gas Consumption Natural gas G 20 (20 mbar) Qmin	m^3/h	1,27	1,27	1,27	1,27	1,27	1,27
Boiler Dry Weight (un-packaged)	kg	156	191	230	272	312	357
Max. available pressure at the chimney base	Pa	100	100	100	100	100	100
Condensate production min-max	kg/h	6-15,9	8,9-24	12,1-32,4	15,1-40,8	18,1-48	21,1-56,4
Sound level	dBA	<49	<49	<49	<49	<49	<49
Electrical Data							
Voltage / Frequency	V/Hz	230/50	230/50	230/50	230/50	230/50	230/50
Fuse on main supply	A (F)	4	4	4	4	4	4
Max power / Min power absorbed	W	145/40	210/40	290/40	362/40	435/40	507/40
Insulation degree	IP	40	40	40	40	40	40
Standby Consumption	W	10	10	10	10	10	10

2.4 - R.H. SIDE VIEW, WITH MAIN COMPONENTS

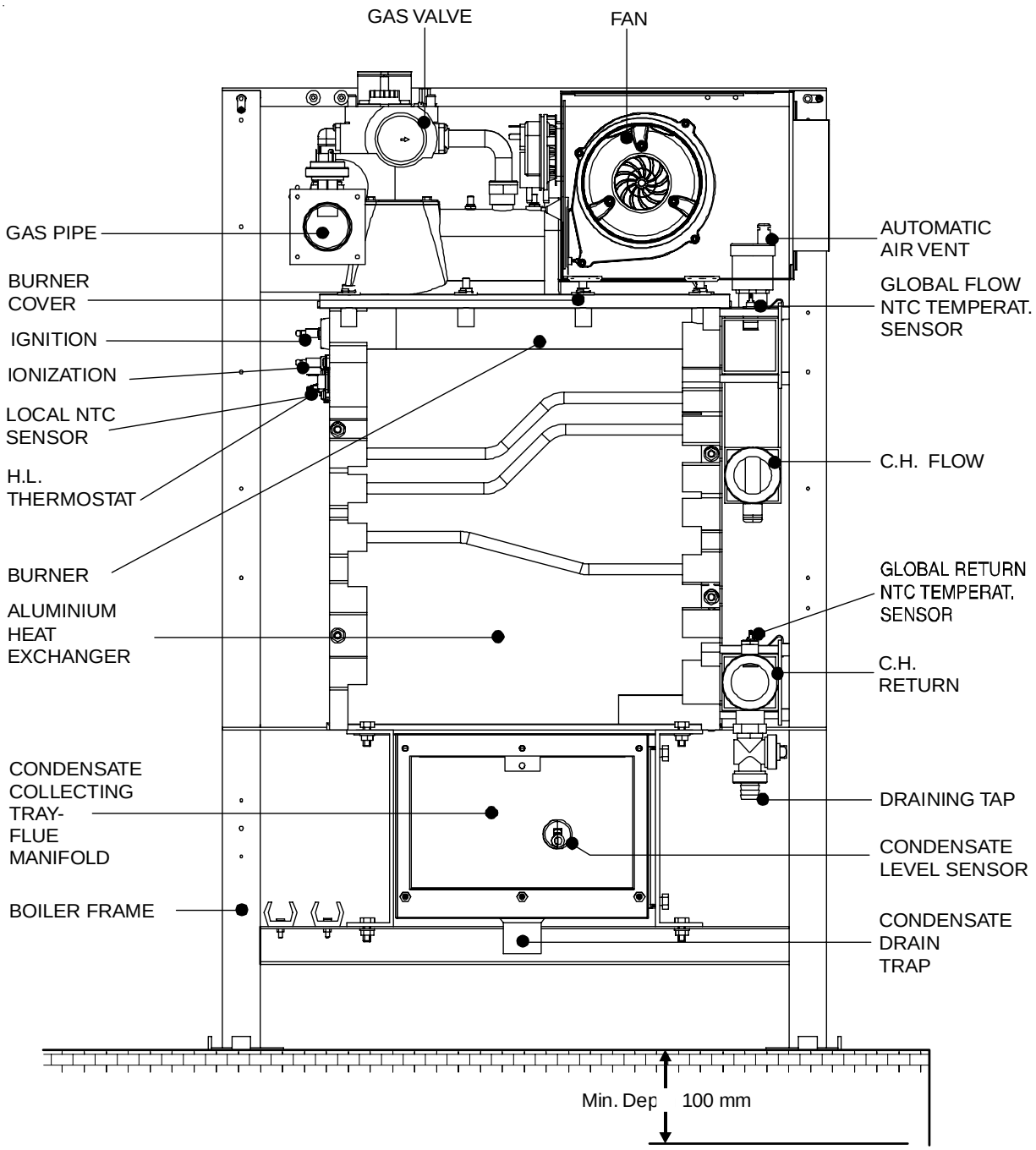

The grilles for the air intake are placed on the Right side, Left side and Rear.
On the casing panels of the boiler there are some pre-cuttings for the **gas connection.** Once the connection position has been selected, remove the relevant pre-cut part.
Unless a special order is placed, the boiler is supplied with:

- **Flue and condensate evacuation connection** on the R.H. side.
- **C.H. flow connection** on the R.H. side.
- **C.H. return connection** on the R.H. side.
- **Gas connection** on the R.H. side.

If the position of the flue connection, for boilers Imax Plus 190 - 235 - 285 - 330, is changed from the standard one (right side) it is necessary to place an order for the harness of the condensate level sensor.

3 INSTRUCTIONS FOR THE INSTALLER

3.1 - GENERAL WARNINGS

WARNING!
This boiler has to be destined for the use for which it has been expressively designed for. Any other use shall be considered improper and therefore dangerous.
This boiler is designed to heat water at a temperature inferior to boiling point at an atmospheric pressure.

WARNING!
These appliances are exclusively designed to be installed inside adequate boiler rooms. Therefore these appliances must not be installed and operated externally.

Before installing the boiler the following points have to be carried out by a competent engineer:
a) An accurate washing of all the pipes of the installation to remove possible residues or impurity that could jeopardize the good operation of the boiler, also from the sanitary point of view.
b) Check that the boiler has been preset for operating with the gas type available.
This is verifiable via the indication on the packaging and on the data badge.
c) Check that the chimney/flue pipe has an adequate draught, does not have any constrictions, and that no other appliance's flue outlets have been fitted, unless the chimney is serving more than one heating appliance, according to the specific standards and regulations in force.
The connection between the boiler and chimney/flue outlet can be made only after this verification has been carried out.

WARNING!
In rooms where there is the presence of aggressive vapours or dust the appliance must operate independently from the air present in the boiler's location room!

WARNING!
The appliance must be installed by a Gas Safe Registered Engineer or, in IE, by a Registered Gas Installer (RGII)

WARNING!
Install the appliance respecting the minimum clearances for operation and servicing.

The boiler must be connected to a heating system which is compatible to its performances and output.

3.2 - STANDARD CODES FOR INSTALLATION

The appliance must be installed in compliance to the instructions contained in this manual.

The installation must be carried out by a Gas Safe Registered Engineer or, in IE, by a Registered Gas Installer (RGII).

The installation must be carried in accordance to the codes of practice, the regulations and the requirements hereby indicated which constitute an indicative list, but not a complete one, as these continue to undergo evolve devolpments.

Moreover, the boiler must be installed in accordance to all the regulations regarding the boiler room, the building regulations and the prescriptions regarding central heating plants in force in the country where the boiler is installed.

The appliance must be installed, commissioned and serviced according to the regulations in force. This is also valid for the hydraulic system, the flue outlet system and the boiler location room.

For relevant codes of practice and safety information see page 6

3.3 - PACKING

The Imax Plus boiler is delivered assembled and protected by a plastic bag inside a strong cardboard box and fixed on a pallet. This allows the boiler to be handled by a forklift. The boiler, with the packaging, can go through a door of 800 mm, whereas, without packaging, it can go through a door of 700 mm.

Remove both straps and finally the cardboard box from above, making sure the product is intact. The packing elements (cardboard box, straps, plastic bags, etc...) **shall not be left in children's hands since they may be dangerous.**

Inside the packing, you can find,
on the boiler back:
- the front casing attached to the back one by a plastic film
- the condensate drain pipe,1 m long, placed under the casing rear panel.

on the L.H. side of the boiler:
- the R.H. side panel attached to the L.H. side one by a plastic film.

on the boiler front:
- the flue chamber/condensate collecting tray screwed to the pallet
- a plastic bag containing:
  • 3 gaskets (1 rectangular between condensate tray and flue terminal, 1 square between flue socket base and flue terminal and 1 for flue socket Ø 150 or Ø 200 mm according to the model
  • 2 bends + 1 Tee piece + 1 plastic plug, Ø 40 mm for candensate drain.
  • the screws necessary for fixing
  • 1 plastic box containing the outer sensor.

on the boiler top:
- a plastic bag containing:
  • This instruction manual

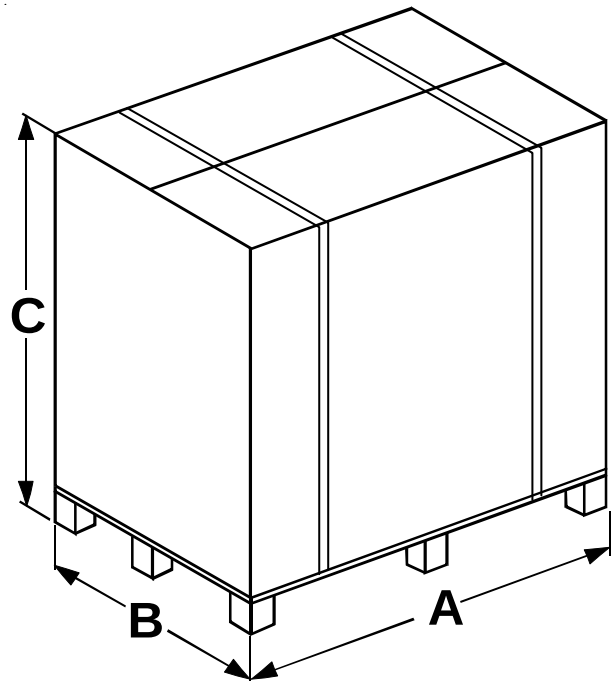

Model	A	B	C	Gross Weight
95	770	780	1250	181 kg
145	770	780	1250	215 kg
190	908	780	1250	256 kg
235	1042	780	1250	300 kg
285	1176	780	1250	341 kg
330	1310	780	1250	387 kg

• Warranty certificate
• Hydraulic certificate
• Controls instructions E8

3.4 - BOILER LOCATION INSIDE A BOILER HOUSE

Special attention shall be paid to local regulations and laws about boiler houses and particularly to the obligation of keeping minimum clearances and empty space around the boiler. The installation shall be in compliance with all latest regulations and laws about boiler houses, installations of heating and hot-water systems, ventilation, chimneys capable of evacuating the flue gases of condensing boilers and any other applicable requirement.

When selecting the position for the installation of the boiler it has to be considered that, for the cleaning and washing operations of the boiler body, one of the boiler sides must be accessible for the removal of a special baffle placed under the aluminum sections.

This baffle can be fixed either from the R.H or L.H. side of the condensate tray. If no modification has been made, the boiler must have its R.H. side accessible, with the flue connection fitted on the R.H or L.H. side. But, if the flue terminal, with the flue socket, is left on the R.H. side and if, from this same side, the baffle has to be removed, then the flue socket must have the possibility to be also removed.

If it is preferred, the baffle can be moved in order to have its fixing screw on the opposite side, regardless the position of the flue outlet.

The boiler can be put on a flat and sufficiently strong base with the same dimensions as those of boiler and at least 100mm high (see fig. 2), in order to assemble the condensate drain trap. An alternative to this base may be a 100mm deep well next to the boiler as a trap housing (see fig. 2). After installation the boiler shall be perfectly horizontal and stable, to reduce any possible vibrations or noises.

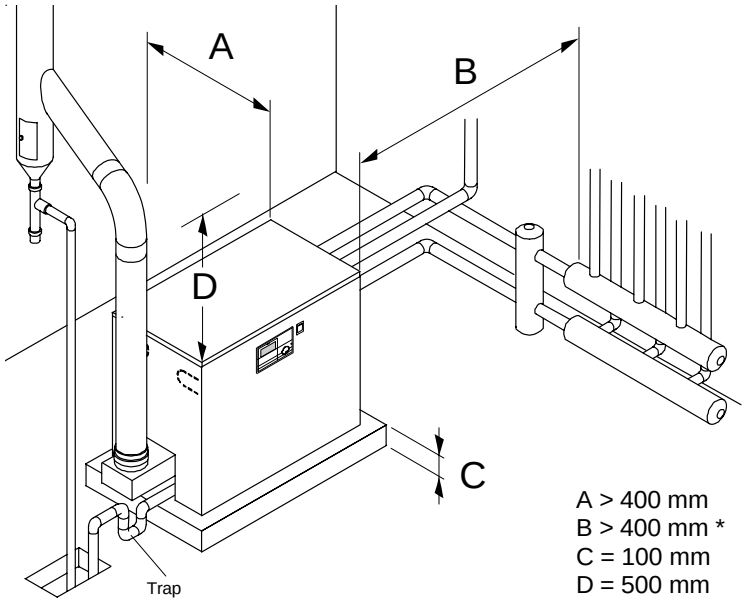

Give the boiler the minimum clearances as shown in the drawing, in order to be able to make the normal service and cleaning operations.

* - Minimum clearance of 50 mm one side only, with 400 mm on opposite side for flue baffle access and pipework connections. For side flue outlet increase to 600 mm clearance. For pipework only allow 300 mm clearance.

Front - 600 mm; except compartment access doors may be closer, but not less than 200 mm, and 600 mm must still be available for service across the full width of the boiler.

3.5 - INSTALLATION ON EXISTING HEATING SYSTEMS

When the appliance is installed on existing systems, ensure yourself that:

- The flue outlet pipe is suitable for condensing boilers, for the temperature of the products of combustion, calculated and manufactured according to the regulations in force. It must be installed as much as possible in a straight line, tested for soundness and must not have any occlusions or restrictions.
- The flue outlet pipe has a connection for the discharge of condensate.
- The boiler room has a suitable outlet for the discharge of condensate produced by the boiler.
- The electrical system has been fitted in compliance to the specific norms and the work has been carried out by a competent person.
- The circulation pump's output, the head and flow direction are suitable.
- The gas feed supply pipe is constructed according to the regulations in force.
- The expansion vessels assure the total absorption of the expansion of the fluid contained in the system.
- The system has been cleaned of impurities and lime scale.

When an Imax Plus boiler is installed onto an existing heating system:

Before the replacement of an existing boiler in an old system can be programmed, it is necessary to thoroughly clean out the system with a basic solution. The system must be cleaned 4 weeks before the substitution, with the system firing at a temperature of 35°C to 40°C.

WARNING!
If it is noticed that a new Imax Plus has replaced an existing boiler in an old system without having first performed what is said in the previous paragraph, do not wash the system now as residual products, present in the circuit, could lead to them gathering in the boiler body, causing damage.
Ideal Boilers recommends contacting a specialised company for water treatment.

If installing an Imax Plus boiler in a new system, it is recommended to thoroughly clean out the system with an adequate product and fit a filter/strainer with two isolating valves on the boiler's return pipe, so that, when necessary, it can be cleaned. This filter will protect the boiler from the dirt coming from the heating system.

When sizing pumps, it is necessary to take into consideration the pressure losses which occur in the primary circuit.

3.6 - BOILER CONNECTION

As delivered the Imax Plus boiler has all the connections on its R.H. side: hydraulic (flow / return), gas, and flue outlet. The locations of the air intake and the flue outlet can be decided on site by removing one of the notched parts available on the boiler right, left and back sides. To fix the terminal with the flue socket, use the screws and the gaskets supplied inside the plastic bag and a min. 300 mm long cross headed screwdriver.

Hydraulic (flow/return) and gas connections can be also moved to the boiler L.H. side by inverting the madifolds to the left side according to the following procedure:

- Remove the complete casing
- Remove the small plates fixing the flow and return global temperature sensors
- Disassemble the flow and return manifolds, leaving in their place, on the aluminum sections, the rubber gaskets (on the upper holes) and the diaphragms (on the lower holes). The diaphragms on the end sections have a hole of 17 mm dia., while the others have a hole of 22 mm dia.
- Reassemble the manifolds with the threaded connection on the opposite side as shown in the figure right.
- Change, between them, the position of the drain cock and the automatic air vent.
- Reposition the temperature sensor white and red leads onto the new flow manifold and the temperature sensor white and green leads onto the new return manifold.
- It is possible to keep the gas manifold inlet on the R.H. side or, otherwise, it is possible to rotate it 180° to have it on the L.H. side. When changing the gas manifold from R.H. side to L.H. side, only on the Imax Plus 95 will it be necessary to swap the plug C with the gas valve fitting A.

POSSIBLE GAS CONNECTION REVERSION

FRONT VIEW
Gas connections on the R.H. side
(std delivery condition).

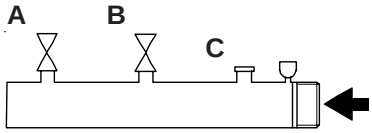

FRONT VIEW
Gas connections on the L.H. side
(after modification condition)

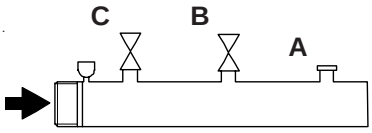

POSSIBLE WATER CONNECTIONS REVERSION

REAR VIEW

C.H. Flow and Return R.H. side connections
(std delivery condition).

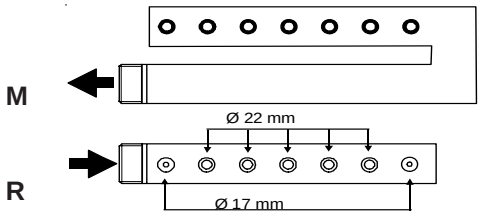

REAR VIEW
C.H. Flow and Return L.H. side connections
(after modification condition)

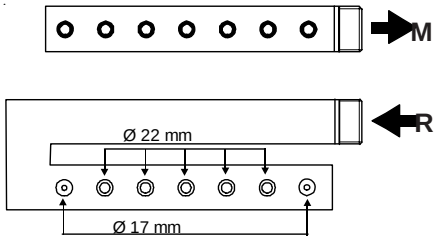

Ø 17 = Diaphragm for the two collectors positioned at the extreme ends

Ø 22 = Diaphragm for the internal collectors.

3.7 - GAS CONNECTION

The gas supply pipe must be connected to the boiler by a 1½” Gas pipe as indicated on page 8.

The gas supply pipe must have a section which is identical or greater then the one used on the boiler and must assure a correct gas pressure.

It is however important to comply with the specific norms and requirements in force, foreseeing on-off valves, gas filter, anti-vibrating joint etc.

Before commissioning an internal gas distribution system and therefore before connecting it to the gas meter, the complete installation must be tested for gas soundness.

If any part of the system is concealed from view the gas soundness test must be carried out before covering the pipes.

DANGER!
The gas connection must be carried out by a Gas Safe Registered Engineer who will have to respect and comply to the regulations in force and to the requirements indicated by the local gas supplier. An incorrect installation could cause injury to persons, animals or damage to property. The manufacturer shall not be held liable for any injury and/or damage.

Before installing the boiler it is recommended to thoroughly clean all the supply piping in order to remove any residual grime which could compromise the boilers correct function

If you smell gas:

a. Do not turn on or off electrical switches, use the telephone or any other object which can provoke sparks;
b. Open all doors and windows in order to allow fresh air to enter and purify the room;
c. Close all gas cocks
d. Contact a service engineer, qualified installer or the gas supply company.

3.8 - FLOW AND RETURN PIPE CONNECTIONS

The CH flow and return circuits have to be connected to the boiler via the respective connections 2" M and R as indicated on page 8.

When determining the size of the CH circuit pipes it is essential to bear in mind the pressure losses induced by any of the system's components and by the configuration of the system.

The route of the piping has to be conceived taking all the necessary precautions in order to avoid air locks and to facilitate the continuous purging of the system.

WARNING!
Before installing the boiler we recommend that the system is flushed out with a suitable product in order to eliminate any metallic tooling or welding residues, oil and grime which could reach the boiler and affect the proper running of the boiler. The appoved water treatments are given on page 24.

Non-observance of these instructions could cause injury to persons, animals or damage to property. The manufacturer shall not be held liable for any such injury and/or damage.

Ensure yourself that the system's piping is not used as the earth clamps for the electrical or telephonic system. They are absolutely unsuitable for this use. In a short time this could cause serious damage to the piping, boiler and radiators.

WARNING!
IT IS ABSOLUTELY FORBIDDEN TO FIT ON-OFF VALVES ON THE BOILER BEFORE THE SAFETY DEVICES

3.9 - DETERMINATION OF PRIMARY BOILER PUMP OR BOILER SYSTEM PUMP

The boiler pump must have a delivery head which can ensure the water flow rate as shown in the diagram “Water pressure losses”.

The following table gives an indication of the pump’s flow rate in function of the Ät of the primary circuit if the installation has a mixing header.

The size of the pumps must be determined by installers or technical engineers according to boiler data and system design.

The water side resistance curve of the boiler is shown in the following diagram.
The pump is not an integral part of the boiler.

It is recommended to choose a pump with the rate and delivery head at about 2/3 of its characteristic heating curve.

Boiler Model	95	145	190	235	285	330
Max water flow rate Demanded in l/h (Δt=15 K)	5344	8032	10743	13457	16181	18301
Max water flow rate Demanded in l/h (Δt=20 K)	4008	6025	8058	10265	12136	14169

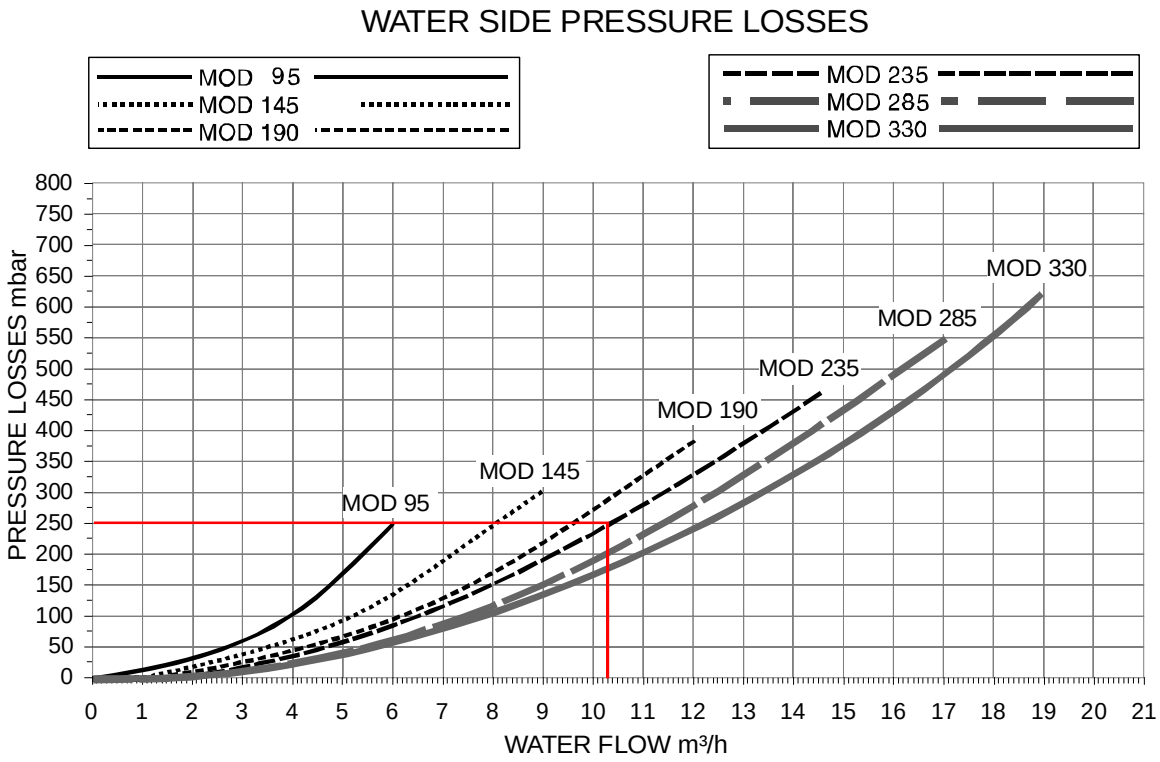

For a ΔT 20 K, of an Imax Plus 235 boiler, the max. water flow rate requested is 10,3 m3/h. From the graph of the boiler’s pressure losses, it can be determined that the pump must be able to guarantee a delivery head of at least 250 mbar.

NOTE: The use of a mixing header fitted between the boiler circuit and the system circuit is always advisable. It becomes INDISPENSABLE if the system requires flow rates superior to the maximum permitted boiler flow rates, which is to say lower than 15K.

3.10 - SEALED SYSTEM REQUIREMENTS

Working pressure 6.0 bar maximum, 0.8 bar minimum.

There is no minimum water pressure switch on the boiler, with safety thermostats providing protection against dry firing. However, should a minimum water pressure switch be required in the system a ¼" connection is available on the return manifold. The electrical connections should be made in series with the minimum gas pressure switch.

Particular reference should be made to BS. 6644: Section 6 and Guidance note PM5 "Automatically controlled steam and hot water boilers" published by the Health and Safety Executive.

The information and guidance given below is not intended to override any requirements of either of the above publications or the requirements of the local authority, gas or water undertakings.

In general commercial closed pressurised systems are provided with either manual or automatic water make up.

On both instances it will be necessary to fit automatic controls intended to protect the boiler, circulating system and ancillary equipment by shutting down the boiler plant if a potentially hazardous situation should arise.

Examples of such situations are low water level and operating pressure or excessive pressure within the system. Depending on circumstances, controls will need to be either manual or automatic reset. In the event of shutdown both visual and audible alarms may be necessary.

Expansion vessels used must comply with BS. 4814 and must be sized on the basis of the total system volume and initial charge pressure.

Initial minimum charge pressure should not be less than 0.8 bar (11.6 psi) and must take account of static head and specification of the pressurising equipment. The maximum water temperatures permissible at the point of minimum pressure in the system are specified in Guidance Note PM5.

When make-up water is not provided automatically it will be necessary to fit controls which shut down the plant in the event of the maximum system pressure approaching to within 0.35 bar (5 psi) of safety valve setting.

3.11 - WIRING DIAGRAM FOR ADDITIONAL SAFETY DEVICES

ON-OFF PUMP

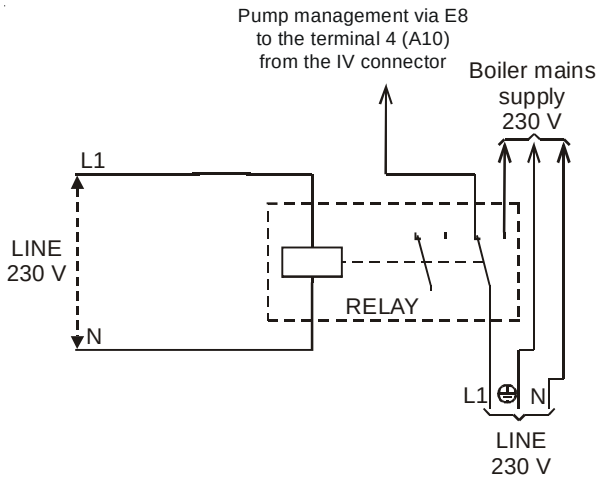

MODULATING PUMP

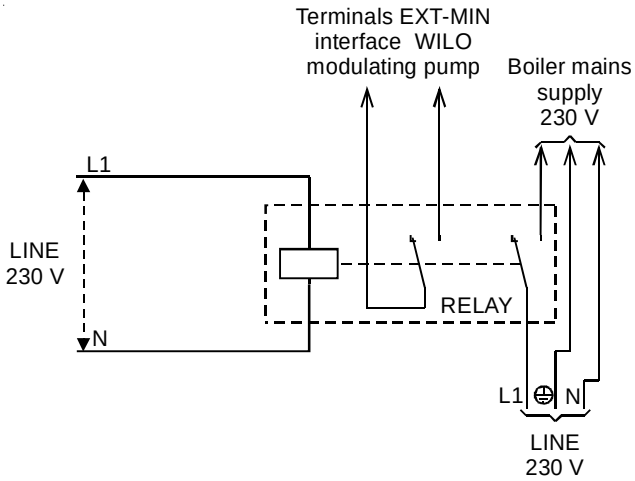

3.12- PRESSURE RELIEF VALVE DRAIN PIPE

A pressure relief valve must be fitted on the flow pipe, immediately next to the boiler. It must be suitable for the capacity of the boiler and must comply to the regulations in force,

WARNING!
Please remember that it is forbidden to install, between the boiler and the pressure relief valve, any type of cut-off device. Moreover it is recommended to use cut-off valves which do not exceed the maximum allowable operating pressure.

WARNING!
In respect to the heating pressure relief valve see right the installation of a discharge pipe with a funnel and a trap which lead to an adequate drainage. The drainage has to be controllable by sight.
If this precaution is not made, an eventual intervention of the pressure relief valve could cause injury to persons, animals or damage to property. The manufacturer shall not be held liable for any injury and/or damage.

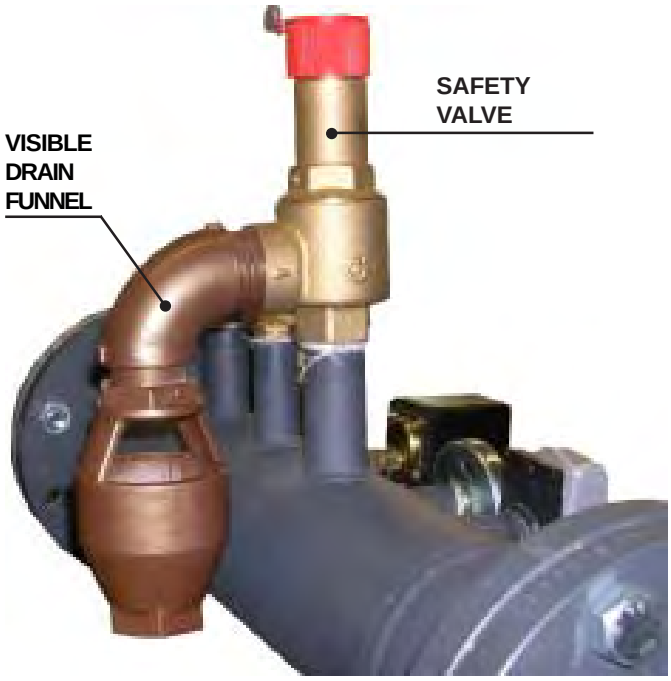

3.13 - MIXING HEADER FILTER

Ideal Boilers suggests the installation of a filter/strainer on the return pipe so that it can be cleaned if necessary.
This will protect the boiler from the heating system dirt.

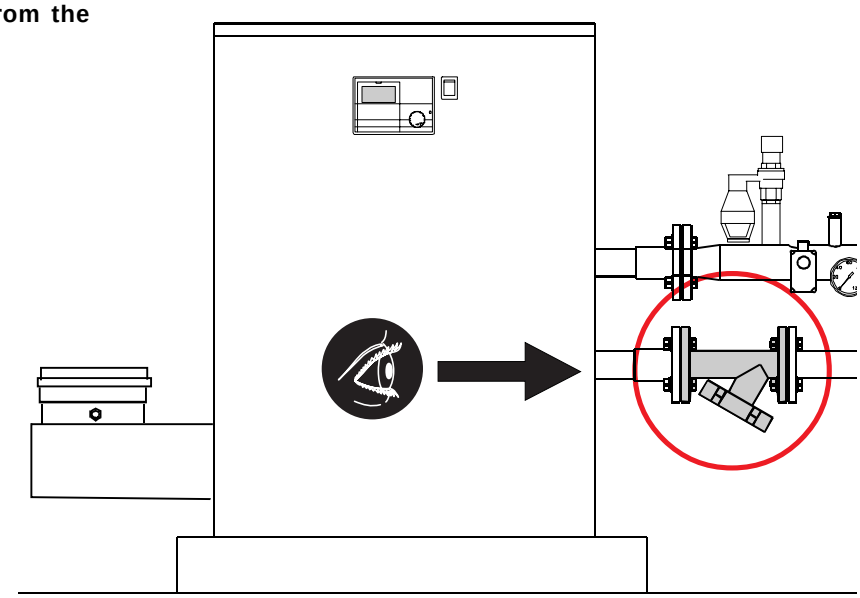

3.14 - BOILER FREEZE PROTECTION

Should the flow temperature (measured at global flow temperature NTC) decrease under 7°C, the system pump will run. Should this temperature decrease to under 3°C, all modules will start at min. output until the return temperature reaches 10°C.
Such protection devices are exclusively for the boiler. For the protection of the system, a second frost protection thermostat is necessary to switch on the heating system pump.
To protect the C.H. system from freezing when boiler is not in operation during cold season, it is necessary to add to the C.H. system water an anti freeze solution.

NB: The antifreeze solution must be compatible with the materials present in the system, and mainly with the aluminum.

WARNING
AFTER A LONG INOPERATION PERIOD OF THE BOILER, IN CASE THE BOILER TEMPERATURE IS BELOW 3°C, ABSOLUTELY DO NOT TRY TO START THE BOILER.

THIS CAN BE ALLOWED ONLY IF YOU ARE SURE THAT AN ANTIFREEZE SOLUTION HAS BEEN ADDED, IN THE PROPER PERCENTAGE, TO THE C.H. WATER.

3.15 - MIXING HEADER

In order to ensure correct boiler operation it is advisable to use a mixing header which guarantees:

- the separation and collection of circuit dirt
- optimal air venting
- hydraulic de-coupling of the two hydraulic circulation circuits
- balancing of the circuits

The use of a mixing header means that compensating controls can be used to operate mixing valves on a variable temperature circuit, without affecting the water flow rate through the boiler.

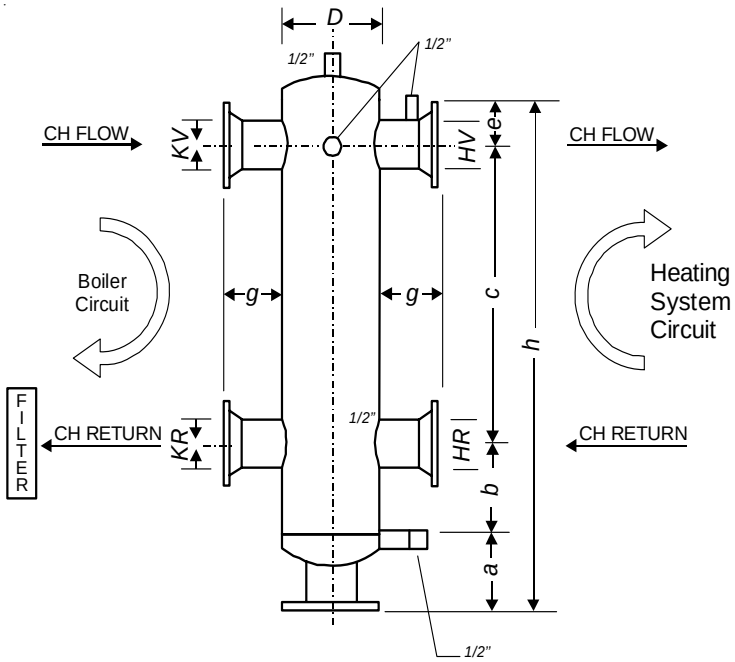

TABLE FOR THE RECOMMENDED DIMENSION OF THE HYDRAULIC COMPENSATOR

MODULEX MODEL	FLOW RATE l/h	D mm	KV KR DN	HV HR DN	a mm	b mm	c mm	e mm	h mm	g mm
95 kW	4.000	100	50	50	200	300	1.000	150	1.650	200
145 kW	8.000	150	65	65	200	300	1.000	150	1.650	200
190 kW	12.000	200	80	80	200	300	1.000	150	1.650	200
235 - 285 kW	20.000	200	100	100	200	300	1.000	150	1.650	200
power supply	30.000	250	125	125	200	300	1.000	150	1.650	200
over > 330 kW	50.000	300	150	150	250	300	1.000	150	1.700	200

Note: The mixing header is not supplied by Ideal Boilers. The information is provided as advice.

3.16 - CONDENSATE DRAIN

Avoid the condensate stagnation inside the combustion products evacuation system, (for this reason the condensate drain must have an inclination toward the drain of at least 30 mm/m (3/8 in. / ft) except the liquid column, inside the condensate trap, which needs to be filled with water after installation: its minimum height, when all the fans are in operation, must be at least 25 mm (1 in.).

In order to avoid ice formation while the boiler is operating, which can cause the boiler to stop, the whole condensate evacuation system has to be well insulated. It is forbidden to evacuate the condensate through a gutter due to a risk of ice forming and corrosion.

The connection to the sewer will be through a visible drain. Given the acidity degree (pH 3 to 5) only plastic material can be used for the condensate evacuation pipes. Moreover it must be dimensioned and constructed so as to allow the correct out-flow of drains, preventing any bottleneck and any leakage.

The outlet of the condensate drain pipe will be on the same side of the flue chamber, passing below the flue chamber.

Before commissioning the boiler fill the condensate trap with water, from the dedicated filling-up plug.

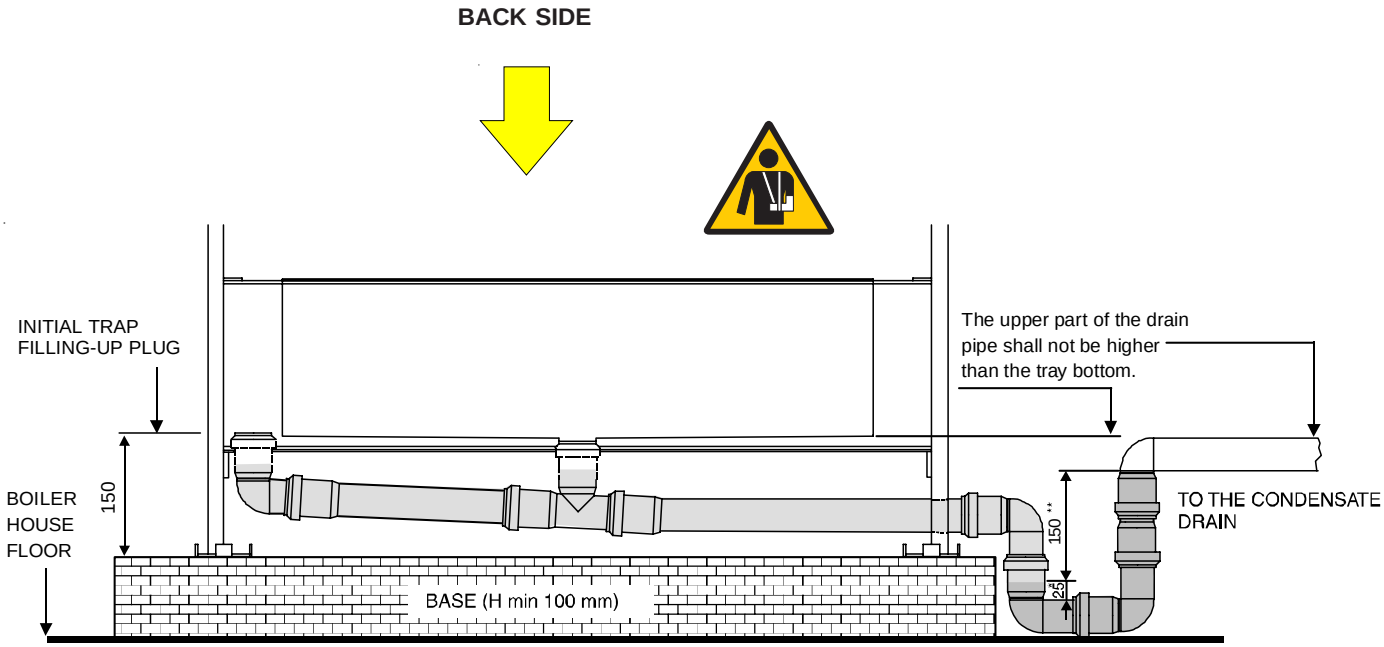

* **Min. height of the condensate column, with all fans operating at max. speed, requested by the EN standards.**

**** Min. height of the condensate column, with all fans operating at max. speed. If it is not possible to create a 100 mm boiler base, install the boiler on the floor and create a min. 100 mm deep well to lodge the trap.**

3.17 - WATER TREATMENT

The imax plus *III* boiler has an ALUMINIUM alloy heat exchanger.

Corrosion will always occur within a heating/hot water system to a greater or lesser degree irrespective of water characteristics, unless the initial fill water from the mains is treated. For these reasons **Ideal Boilers** strongly recommends that the system be thoroughly cleaned prior to the use of a stable inhibitor which does not require continual topping up to combat the effects of hardness, salts, and corrosion on the heat exchanger and its associated systems.

Therefore it is important that if water treatment is used it is suitable for the material of the heat exchanger. The ONLY water treatments approved are Fernox Copal or MB1 or GE Betz Sentinel X100 inhibitors and associated water treatments, which must be used in accordance with manufactures instructions. Current suitability should be confirmed directly with the manufacturer.

Sentinel Performance Solutions
The Heath Business & Technical Park
Runcorn, Cheshire. WA7 4QX
Tel 0800 389 4670
www.sentinel-solutions.net

or

Fernox Manufacturing Co. Ltd.,
Cookson Electronics, Forsyth Road,
Sheerwater, Woking, Surrey, GU21 5RZ
Tel: 01799 521133

*Artifically softened water must **NOT** be used to fill the system.*

3.18 - CONNECTION TO THE CHIMNEY

In a condensing boiler the flue gases are evacuated at a very low temperature (Max about 84°C). It is necessary that the chimney is perfectly impermeble to the condensate of the combustion products and is made of materials corrosion resistant.
The different spigot joints must be well sealed and equipped with suitable gaskets, in order to prevent the outlet of condensate and the inlet of air.
Concerning the cross section and the height of the chimney, it is necessary to make reference to the national and local rules in force.

In order to prevent the formation of ice, during the operation, the temperature of the internal wall of the combustion product evacuation system, in all its length, has not to be below 0°C. For condensation operating conditions of the appliance at the external design temperature, it will be necessary to install a condensate evacuation system, discharging according to the installation condition, in the boiler condensate tray or in another dish pan separated from it.

The type of flue pipe used should be 316 grade Stainless Steel or be of equivalent corrosion resistance. Advice regarding the availability of proprietary types of flue system can be obtained by contacting Ideal Boilers. All joints or connections in the flue system must be impervious to condensate leakage.
Low points in the flue system should be drained using pipe of material resistant to condensate corrosion. All drains in the flue should incorporate a water trap.

Flue Connections
It is possible to combine flue connections at any of the positions of left, right and rear. To change connections, simply remove the blanking plates from the connection required and attach the flue connections. Seal off the unused connections with the removed blanking plates.

Air Connections
Boiler sizes 95-145 are delivered with an air inlet filter fitted on the right side with the left side and rear connections blanked off. If required the filter can be moved to the left side, using the removed end panel and blanking plate on the right side. Boiler sizes 190-235 have an air inlet filter fitted to both sides. Boiler sizes 285-330 have filters fitted to both sides and the rear. Ducting air directly to the boiler from outside is possible to the left or right side or rear by the removal of all filter(s) andthe use of air inlet spigot kit(s). These kits are obtainable from the boiler manufacturer.

Model	Modules	Ø Flue socket
95	2	150
145	3	150
190	4	150
235	5	200
285	6	200
330	7	200

Maximum pressure available at flue outlet : 100Pa

3.19 - ROOM SEALED VERSION

The Imax Plus boiler is suitable also for installation in C 63 type, by taking the combustion air from outside the boiler house via an air duct.
To convert the boiler for type C 63 operation, a special kit is available for order from Ideal Boilers - Air inlet socket & blanking plate kit

Chimney dimension
DIN 4705

Flue Gas Temperature 40°C
Pressure avaible 40 Pa

Flue gas mass flow rate kg/h	Flue gas mass flow rate kg/s	CO_2 content 6%	8%	10%	Nominal Heat input (kW)
2520	0,700	778	1037	1400	
2160	0,600	667	889	1200	
1800	0,500	555	741	1000	
		501	668	900	
1440	0,400	445	593	800	
1260	0,350	389	519	700	
1080	0,300	333	444	600	
900	0,250	277	370	500	
720	0,200	222	296	400	
540	0,150	167	222	300	
396					
360	0,100	111	148	200	
324	0,090	100	133	180	
288	0,080	89	119	160	
252	0,070	78	104	140	
216	0,060	67	89	120	
180	0,050	56	74	100	
		50	66	90	
144	0,040	44	59	80	
126	0,035	39	52	70	
108	0,030	34	44	60	
90	0,025	28	37	50	
72	0,020	22	30	40	
54	0,015	17	22	30	
36	0,010	11	15	20	
32	0,009	10	13	18	
29	0,008	9	12	16	
25	0,007	8	10	14	
22	0,006	7	9	12	
18	0,005	5,6	8	10	
14,4	0,004	5,0	7,4	9	
12,0	0,003	4,4	6,6	8	
10,8	0,002	3,9	5,9	7	
9,0	0,001	3,4	4,4	6	

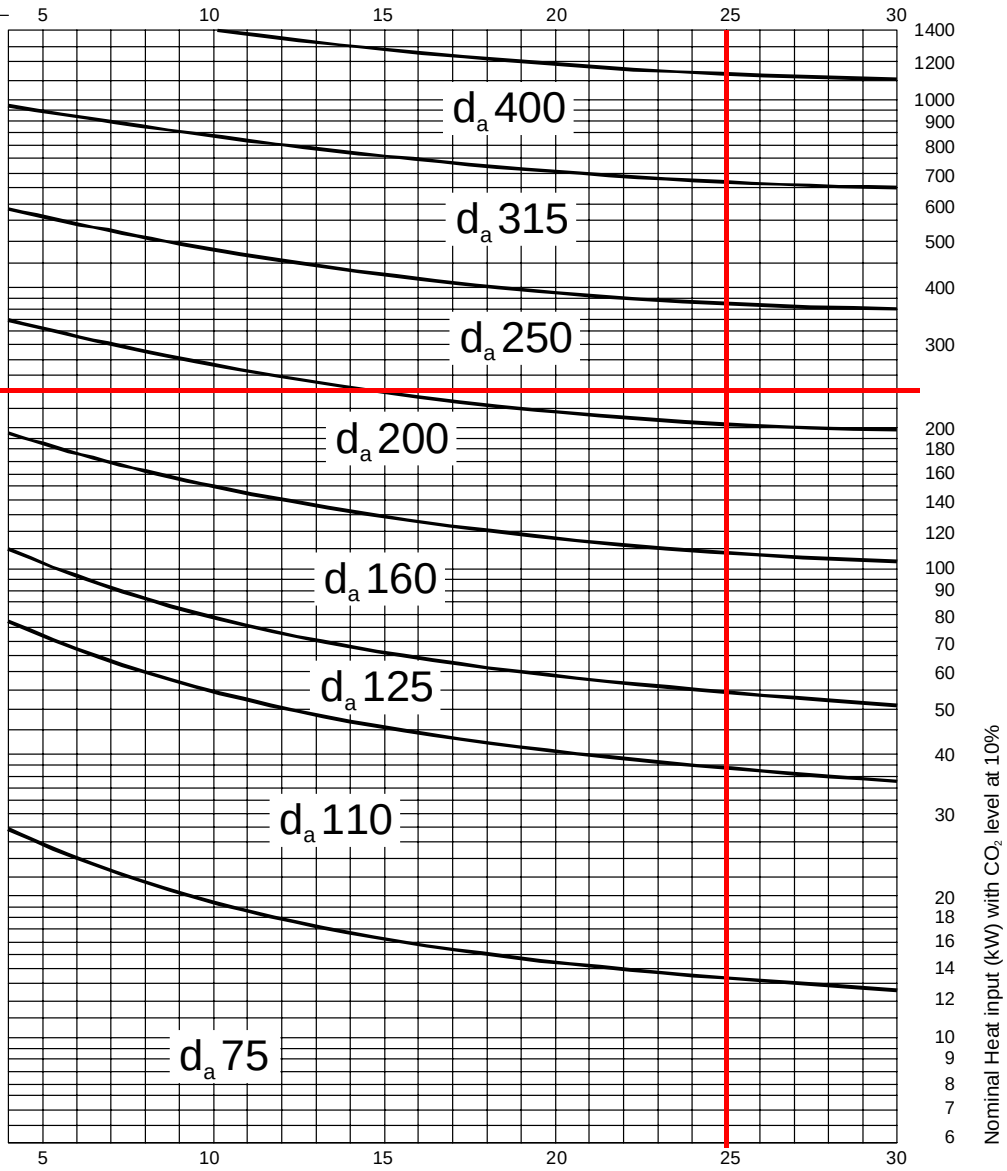

Flue gas mass flow rate	
Imax Plus	Flue gas mass flow rate (max) kg/h
95	158,4
145	237,6
190	317
235	396
285	475
330	554,3

Example:
Imax Plus 235
Flue gas mass flow rate = 396 Kg/h
Chimney height = 25 m
Chimney connection Ø = 250 mm

NOTE:
The diagram shows
the indicated values

3.20 - BOILER OPERATION

The boiler consists of mutally connected combustion chambers: each of them has its own burner - fan, with air pressure switch for control - gas valve, with ignition and ionisation device - BMM (Burner Modular Manager) control PCB.

In each cast aluminum section there is a temperature sensor NTC (Negative Temperature Coefficient), called local NTC, which locally checks the flow temperature of each aluminum section, and a High Limit thermostat.

The flow temperature at the boiler outlet and the return temperature at the boiler inlet are controlled by global NTC temperature sensors.

When more heat is requested by heating or DHW systems, the boiler starts up and water will be heated by an aluminum boiler body. Then the boiler pump sends water to the mixing header, and, from here, the C.H. pump will send it to the radiators, according to the heating system chosen.

The combustion air is supplied by fans and taken in from the boiler room (for type B 23 boilers), or from outside through pipes (for type C 63 boilers, i.e. room sealed combustion boilers).
The combustion air is then pushed into the pre-combustion-chamber through a diaphragm.
Beyond the diaphragm, the air mixes with gas and such mixture passing through the non-return valve is sent to the burner.
Then, on leaving the burner surface, the air/gas mixture ignites electrically and the resulting combustion gases, after being transported (and cooled) through pinned sections, enter the condensate collecting manifold and then are evacuated through the boiler chimney.

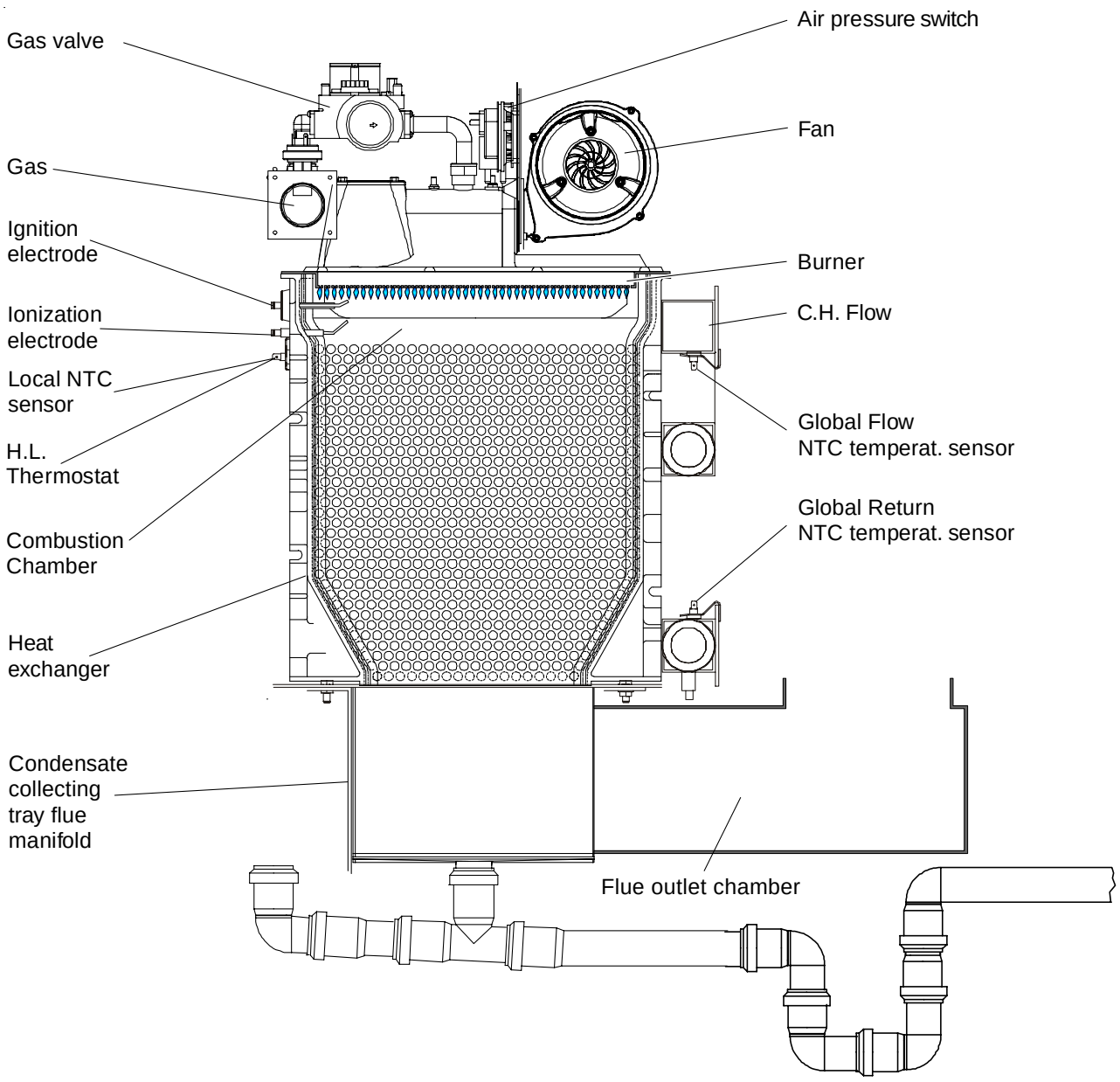

Instructions for the installer

When there is a heat request from the E8 controller or from a BCM (Boiler Cascade Manager), the E8 or BCM calculates the necessary output according to the difference between the set temperature (or the temperature calculated by the outer compensator) and the global flow temperature. The number of thermal elements (each thermal element represents a maximum input of 48 kW) x 100% determines the maximum input expressed in %.
When the input has been determined, the boiler pump (not supplied by Ideal) starts and the fan of one thermal element is set in motion at starting speed. The gas valve opens and ignition occurs within 5 sec. When the ionisation electrode detects the flame, the thermal element starts operating.
Subsequently other thermal elements are likely to start in the same way. One of the operation principles for this boiler is letting as many burners as possible operate simultaneously at minimum load to reach the maximum efficiency.

For example, if a 4 thermal element boiler is requested to operate at its max input, this shall be 400% i.e. :

48 kW x 4 thermal elements = 192 kW = 400%.
If it is requested to operate at 200% input, thanks to the input sharing system on the highest number of thermal elements, each thermal element will operate at 50% output i.e. :

200% : 4 thermal elements = 50%
equal to a total of 96 kW, that is 24 kW for each thermal element.

Such a principle provides clearly efficiencies much higher than those obtained in traditional groups of small boilers installed in cascade.
When the input shared on each thermal element is less than **12 kW**, one thermal element after the other is automatically excluded and the remaining input is shared on thermal elements having the smallest number of operation hours (by the automatic operation-time calculating system).
Modulation, i.e. input reduction, is based on the difference between the set temperature (or the temperature calculated by the outer compensator) and the global flow temperature.
When no ignition occurs, the ignition device repeats two more times the ignition sequence and then puts to lock out position the thermal element concerned.

1 Thermal element (module) = 48 kW = 100%

4 Thermal elem. = 48 kW x 4 = 192 kW = 400%

400% : 192 kW = 200% : X

X = (192 x 200) **:** 400 = 96 kW input shared on 4 thermal elements

Input shared on 4 thermal elements : total input = 96 : 192 = 0,5 = 50%

4 thermal elements of 48 kW each working at 50% of the output give = 96 kW = (200%), i.e. 24 kW / thermal element

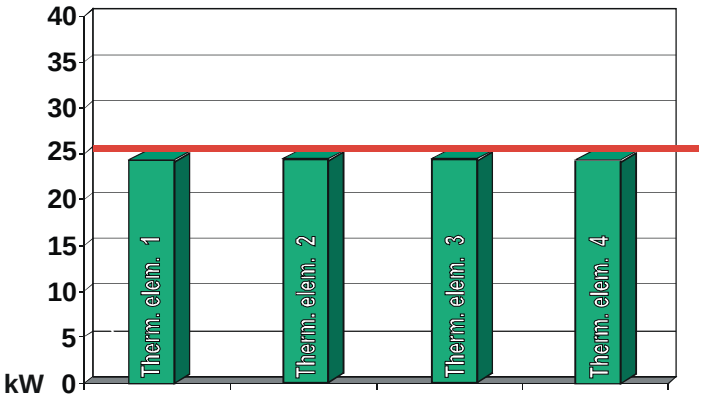

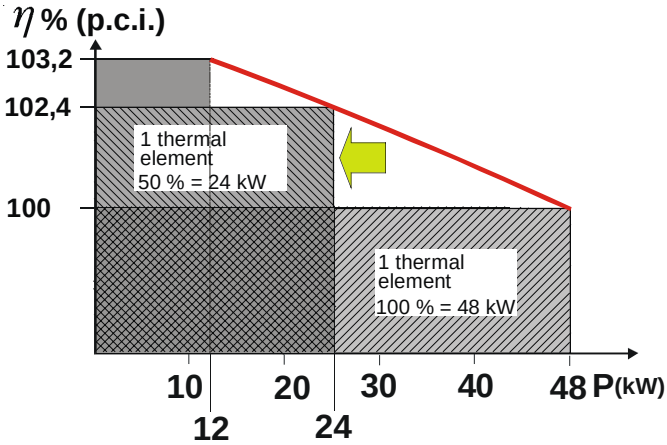

Efficiency of a thermal element working at full capacity 48 kW = 100 % (in condensation)

Efficiency of a thermal element working at reduced capacity 24 kW = 102,4 % (in condesation)

Efficiency of a thermal element working at minimum capacity 12 kW = 103,2 % (in condesation)

All the thermal elements work in parallel at the same output, equalizing, thus, the C.H. system efficiency to the one of the thermal element.

3.21 - ELECTRICAL CONNECTIONS

Regulatory Requirements

The gas and water feeding pipes and the CH system pipes cannot be used as protective earth.

Connections

Ideal Boilers refuses responsibility for any damage arising from failure to earth the boiler correctly.

Wiring external to the appliance MUST be in accordance with the current I.E.E. (BS7671) Wiring Regulations and any local regulations which apply. For Ireland reference should be made to the current ETCI rules for electrical installations.

The point of connection to the mains should be readily accessible and adjacent to the boiler.

For the appliance's general electrical supply the use of adaptors, multiple sockets and/or extension cords is strictly forbidden.

The use of any power supplied equipment implies the observance of several fundamental rules, such as:
- Do not touch the appliance with any wet part of your body and/or barefooted;
- Do not pull the supply cables
- Do not expose the boiler to sunlight, rain, etc.
- Do not permit children or non-expert people to use the appliance.

Mains electrical supply connection 230V

The electric connections of the boiler are shown in the section named "WIRING DIAGRAMS" (paragraph 3.18 page 30)

A mains supply of 230 V – 50 Hz is required.

WARNING!
The appliance MUST be wired with a permanent live supply. Use the plug provided for this purpose. The boiler is phase sensitive so correct connection of the live and neutral wires is essential. The supply must not be interrupted by any system controls. Controlling the mains input in this way will prevent the pump over-run sequence and may cause damage to the heat exchanger.

DANGER!
The electrical connections must be carried out only by a qualified engineer.
Before carrying out the connections or any other operation on the electrical parts, always switch off and disconnect the electricity supply and ensure yourself that it cannot be accidentally turned on.

It is necessary to fit a double pole switch on the electrical supply line, having a 3 mm contact separation in both poles, in an easy accessible position in order to make quick and safe the servicing operations.

The boiler electrical supply (230 V – 50 Hz – single phase) is to be made using the three pole plug supplied with the boiler.

WARNING!
230 V cables shall be separated from 24 V ones, using the two plastic conduits supplied within the boiler casing L.H. side panel.

3.22 - FUNCTIONAL WIRING DIAGRAM

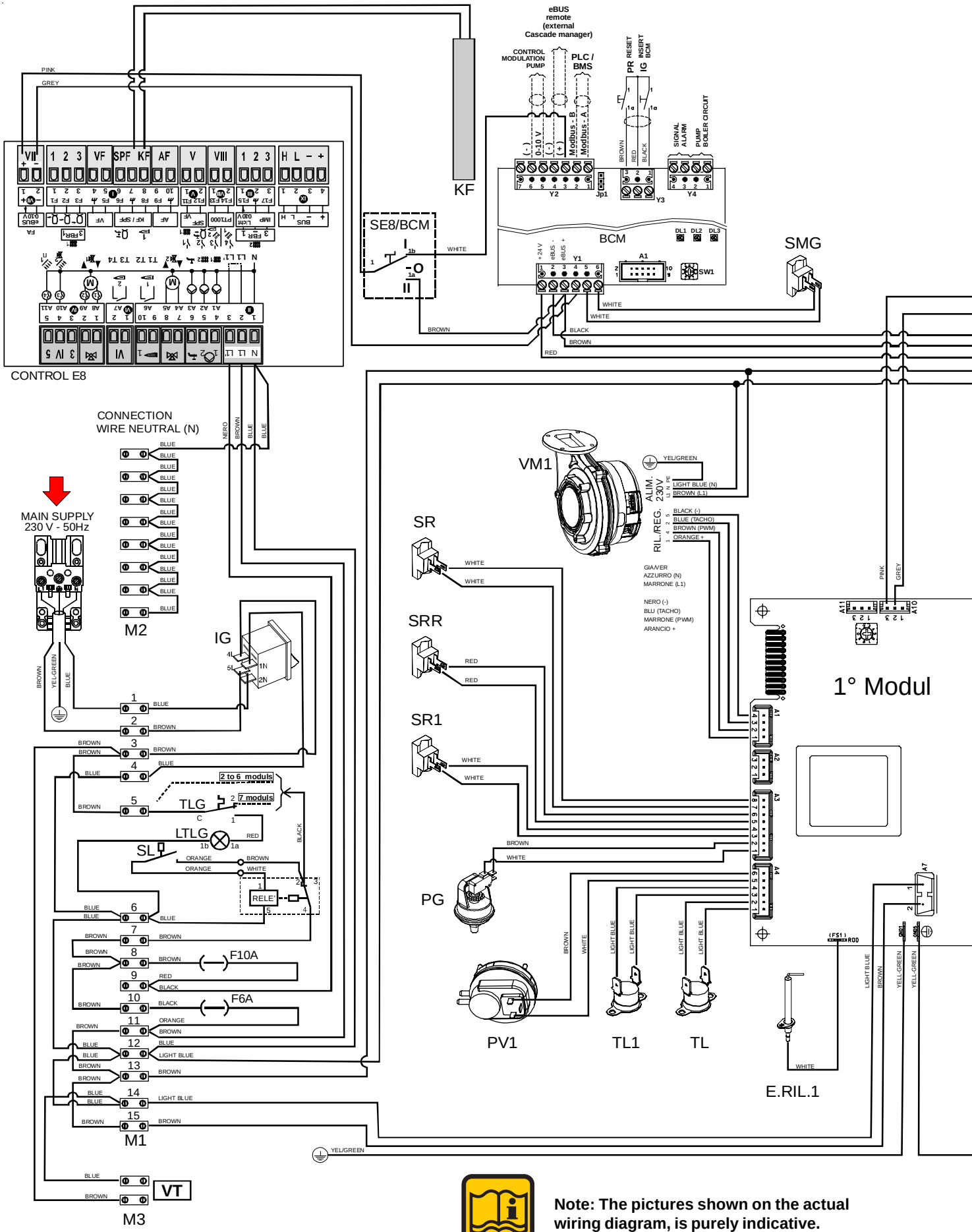

Note: The pictures shown on the actual wiring diagram, is purely indicative.

E.ACC 1....7	Ignition electrode
E.RIL 1....7	Ionization electrode
IG	Main switch
KF	Global Flow Temperature Sensor E8
PG	Minimum Gas pressure swich (not supplied)
PV 1....7	Fan pressure swich
SMG	Global Flow Temperature Sensor BCM
SR	Local Flow NTC Temperature sensor
SR 1....7	Local Flow NTC Temperature sensor
SRR	Global Return NTC Temperature sensor
TL	High limit thermostat
TL 1....7	Local High limit thermostat
TLG	Global High limit thermostat
VG 1....7	Gas Valve
TRA.ACC 1....7	Ignition Transformer
VM 1....7	Modulating Fan

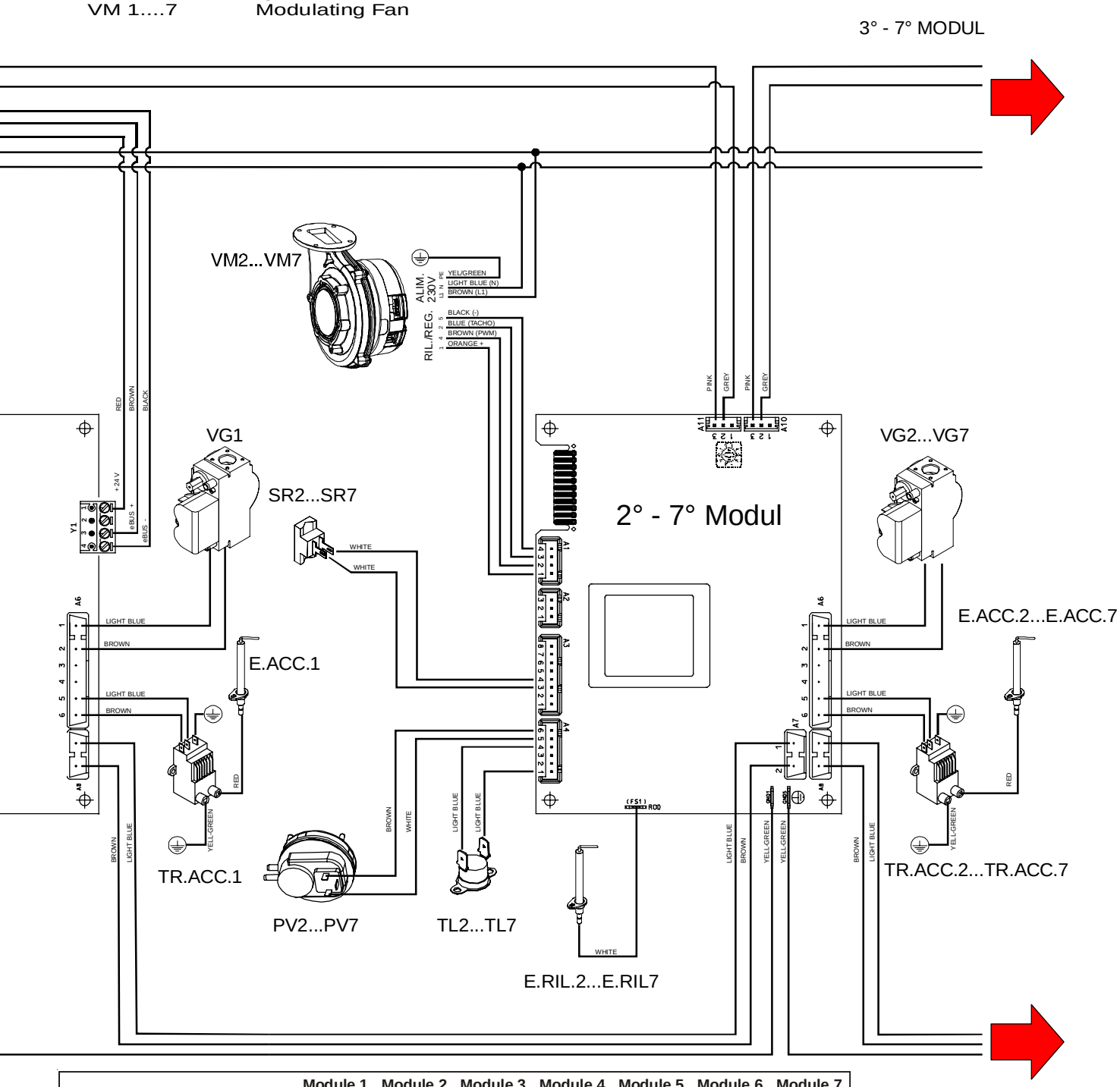

Setting of modules selectors

Module 1 (Pos 0)	Module 2 (Pos 1)	Module 3 (Pos 2)	Module 4 (Pos 3)	Module 5 (Pos 4)	Module 6 (Pos 5)	Module 7 (Pos 6)

3° - 7° MODUL

3.23 - WIRING DIAGRAM FOR CONNECTIONS AND MANAGING

On the back side of the E8 regulator there are two terminal blocks, of which one is for the mains (230 V) connections and the other one is for the low voltage connections.

The main controls, necessary for the C.H. system management and for the boiler control, as well some components which are part of the boiler house, must be connected to the terminal blocks.

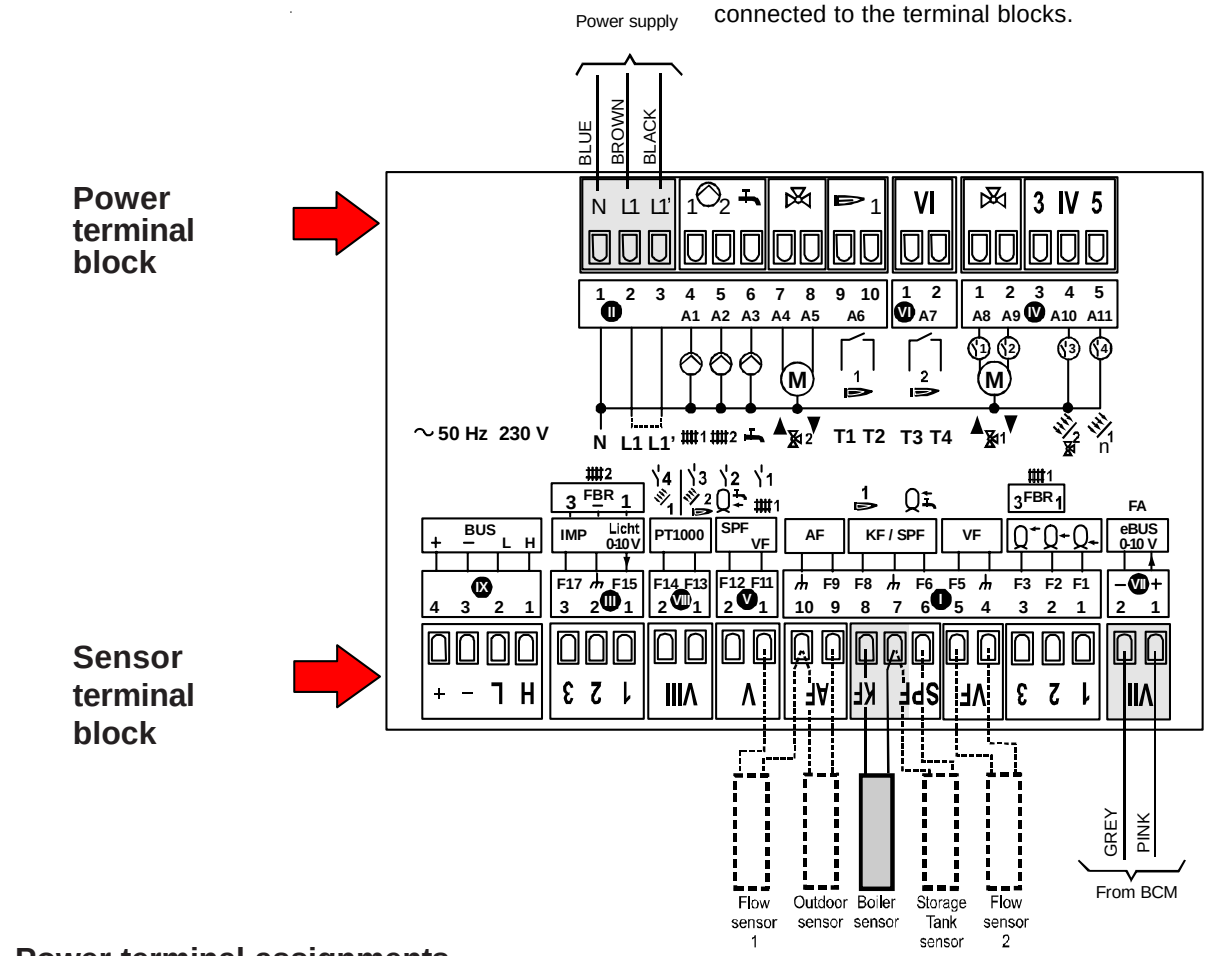

Power terminal assignments

Terminal II

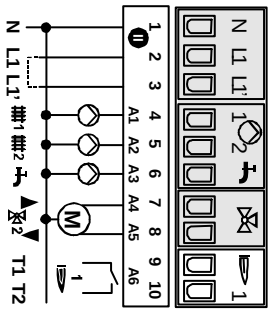

N: Neutral conductor, mains
L1: Power supply, unit
L2: Power supply to relay
: heating circuit pump HK 1
: heating circuit pump HK 2
: Storage tank charging pump
: Mixer open, heating circuit 2
: Mixer closed, heating circuit 2

Terminal VI

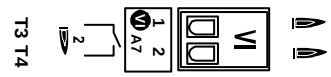

Terminal IV

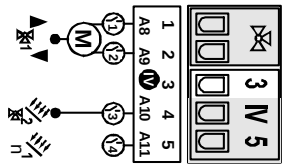

: Mixer open, heating circuit 1
: Mixer closed, heating circuit 1

Multifunction relay
Recycle pump / Multifunction relay

Sensor terminal assignments

Terminal VII (VII) — Connection to BCM

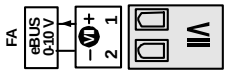

Pin 1: eBUS (FA) or 0-10V output
Pin 2: (Ground)

Terminal I (I)

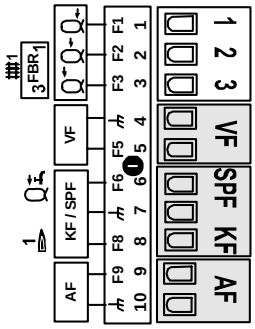

Buffer storage tank low sensor
Buf. stor. tank middle sensor / FBR heat. circ. 1 (room sensor)
Buf. stor. tank top sensor / FBR heat. circ. 1 (set value)
VF Pin 4: Flow sensor, heating circuit 2 (ground)
VF Pin 5: Flow sensor, heating circuit 2
SPF Pin 6: Storage tank sensor
SPF Pin 7: Storage tank and boiler sensor (ground)
KF Pin 8: Boiler sensor
AF Pin 9: Outdoor sensor
AF Pin 10: Outdoor sensor (ground)

Terminal V (V)

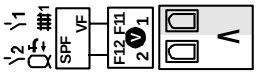

VF Pin 1: Flow sensor heating circuit 1 / sensor multifunction 1
SPF Pin 2: Service water low sensor / sensor multifunction 2

Terminal VIII (VIII)

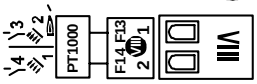

F13 Pin 1: Sensor HS2 / Solar 2 / Multifunction relay 3
F14 Pin 2: Sensor Solar 1 / Sensor multifunction relay 4

Terminal III (III)

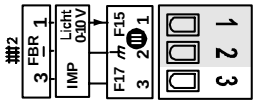

F15 Pin 1: FBR heating circuit 2 (room sensor) / 0-10V IN / Light
Pin 2: FBR heating circuit 2 (ground)
F17 Pin 3: FBR heating circuit 2 (set value) / Pulse counter for

Morsetto IX (IX) — For connection to remote control devices

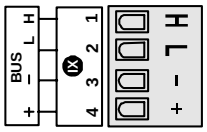

H CAN Bus Pin 1 = H (Data)
L CAN Bus Pin 2 = L (Data)
- CAN Bus Pin 3 = - (ground, Gnd)
+ CAN Bus Pin 4 = + (12V supply)

3.24 - INSTALLATION EXAMPLES (functional wiring and connections description)

INSTALLATION OF A BOILER WITH CONNECTION TO A DIRECT HEATING ZONE

- I AF (9-10) outdoor sensor
- II (4) Pump heating circuit 1
- IV (4) Collector pump

V VF 1 (1) Flow sensor heating circuit 1
I 10 (10) Ground outdoor sensor

* *This sensor can also remain unused*

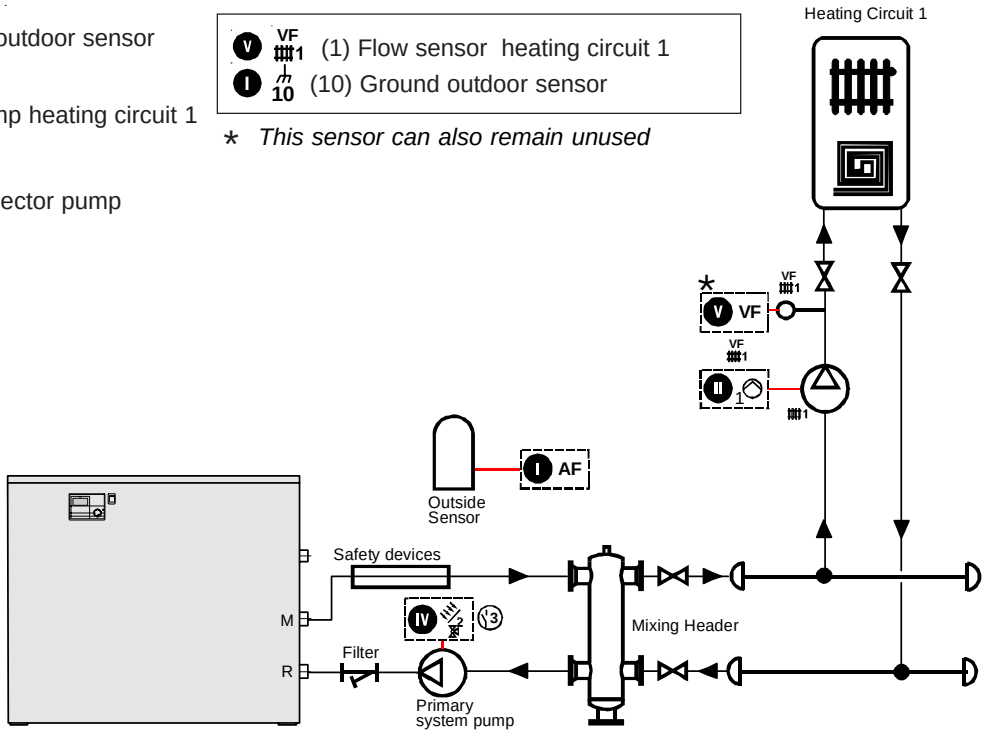

INSTALLATION OF A BOILER WITH CONNECTION TO TWO DIRECT HEATING ZONES + D.H.W. PRODUCTION

- I VF 2 (4-5) Flow sensor heating circuit 2
  ** *necessary for enabling 2° circuit*
- SPF (6-7) Storage tank sensor
- AF (9-10) outdoor sensor
- II (4) Pump heating circuit 1
  (5) Pump heating circuit 2
  (6) Cylinder charging pump
  (5) Re-circulation pump storage tank
- IV n1
- IV (4) Collector pump

* *This sensor can also remain unused*

V VF 1 (1) Flow sensor heating circuit 1
I 10 (10) Ground outdoor sensor

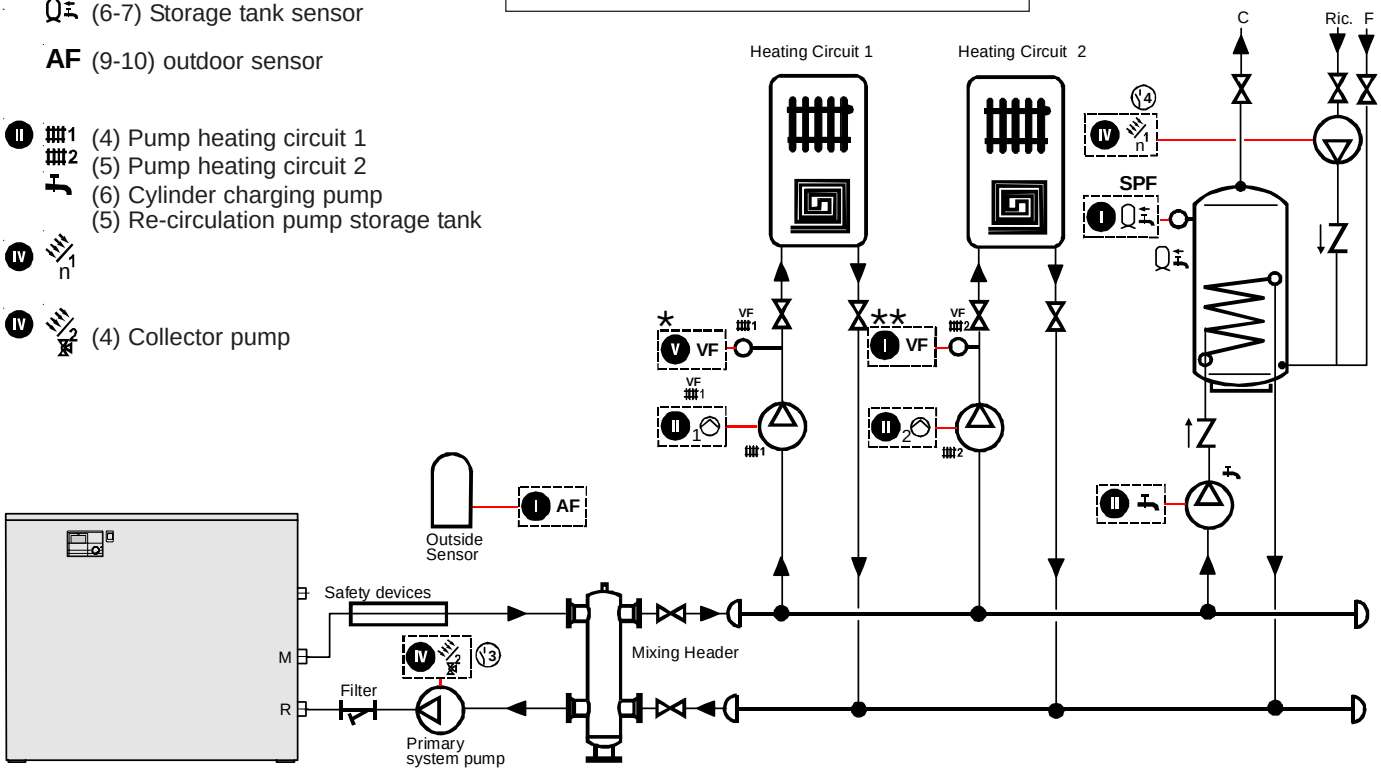

INSTALLATION OF A BOILER WITH CONNECTION TO ONE MIXED AND ONE DIRECT HEATING ZONES + D.H.W. PROD.

∗ *This sensor can also remain unused*

- I VF 2 (4-5) Flow sensor heating circuit 2
- SPF (6-7) Storage tank sensor
- AF (9-10) outdoor sensor
- II 1 (4) Pump heating circuit 1
- 2 (5) Pump heating circuit 2
- (6) Cylinder charging pump
- 2 (7) Mixer motor heating circuit 2 OPEN
- (8) Mixer motor heating circuit 2 CLOSE
- IV n 1 (5) Re-circulation pump storage tank
- IV 2 (4) Collector pump

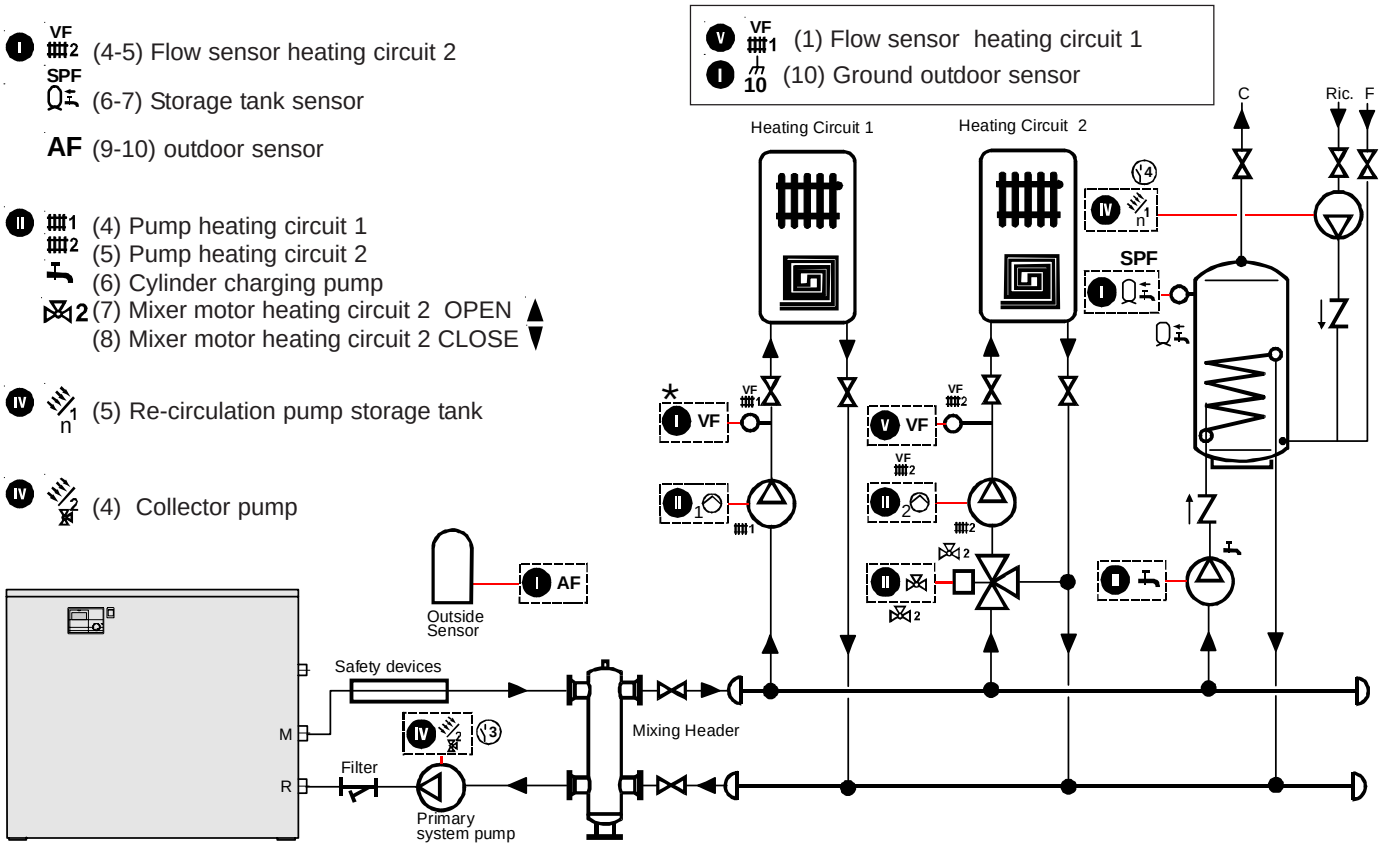

INSTALLATION OF A BOILER WITH CONNECTION TO TWO MIXED ZONES + D.H.W. PRODUCTION

∗ *necessary for mixing valve control*

- I VF 2 (4-5) Flow sensor heating circuit 2 (Optional)
- SPF (6-7) Storage tank sensor
- AF (9-10) outdoor sensor
- II 1 (4) Pump heating circuit 1
- 2 (5) Pump heating circuit 2
- (6) Cylinder charging pump
- 2 (7) Mixer motor heating circuit 2 OPEN
- (8) Mixer motor heating circuit 2 CLOSE
- 1 (1) Mixer motor heating circuit 1 OPEN
- (2) Mixer motor heating circuit 1CLOSE
- IV n 1 (5) Re-circulation pump storage tank
- IV 2 (4) Collector pump

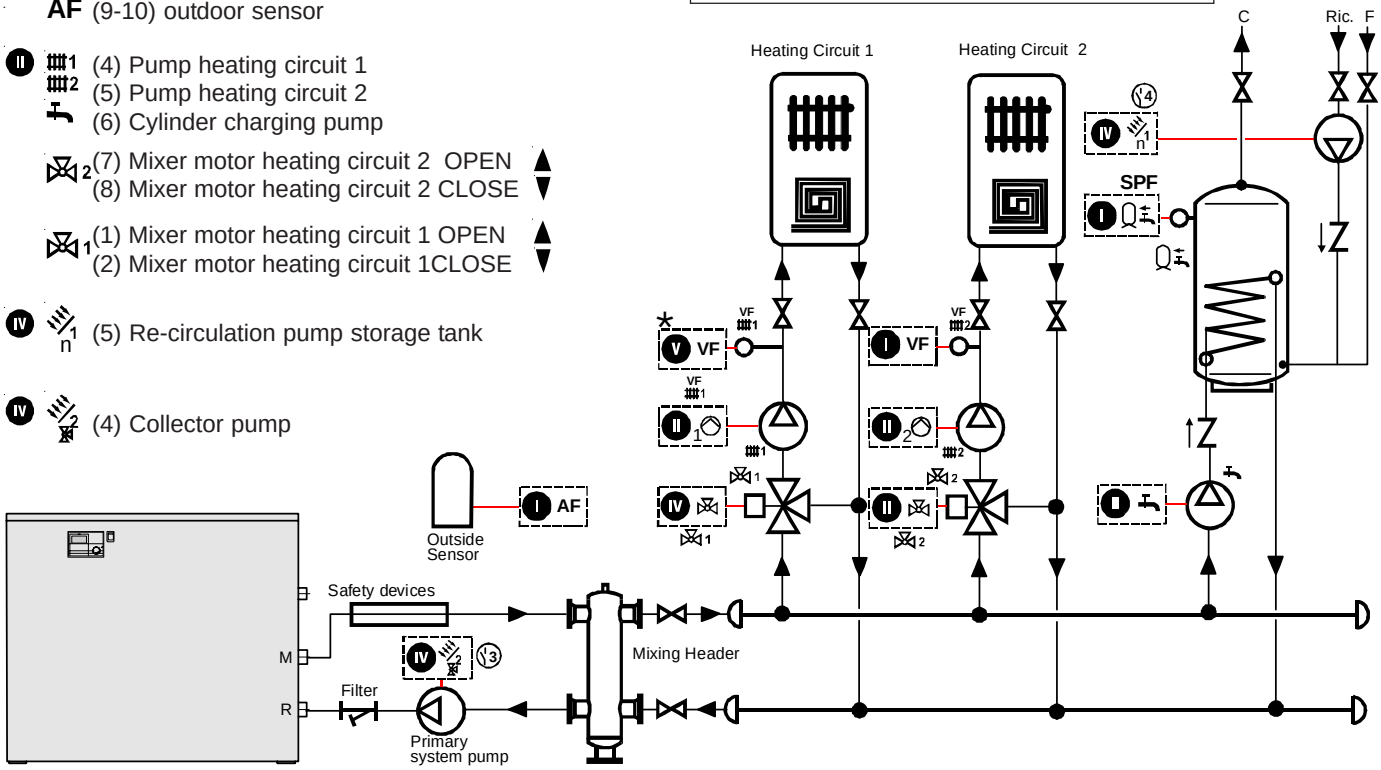

Instructions for the installer

INSTALLATION OF A BOILER WITH CONNECTION TO TWO MIXED ZONES + D.H.W. PRODUCTION BY SOLAR PANELS

* *necessary for mixing valve control*

- (1) Flow sensor heating circuit 1
- (10) Ground outdoor sensor

- VF (4-5) Flow sensor heating circuit 2 (optional)
- SPF (6-7) Storage tank sensor
- AF (9-10) outdoor sensor

- (4) Pump heating circuit 1
- (5) Pump heating circuit 2
- (6) Cylinder charging pump

- (7) Mixer motor heating circuit 2 OPEN
- (8) Mixer motor heating circuit 2 CLOSE

- (1) Mixer motor heating circuit 1 OPEN
- (2) Mixer motor heating circuit 1CLOSE

- (5) Re-circulation pump storage tank

- (4) Collector pump

- (2) Hot water tank low / Multifunction relay sensor 2 (optional)

- PT1000 (2) PT1000 sensor solar 1 / Multifunction relay sensor 4 (optional)

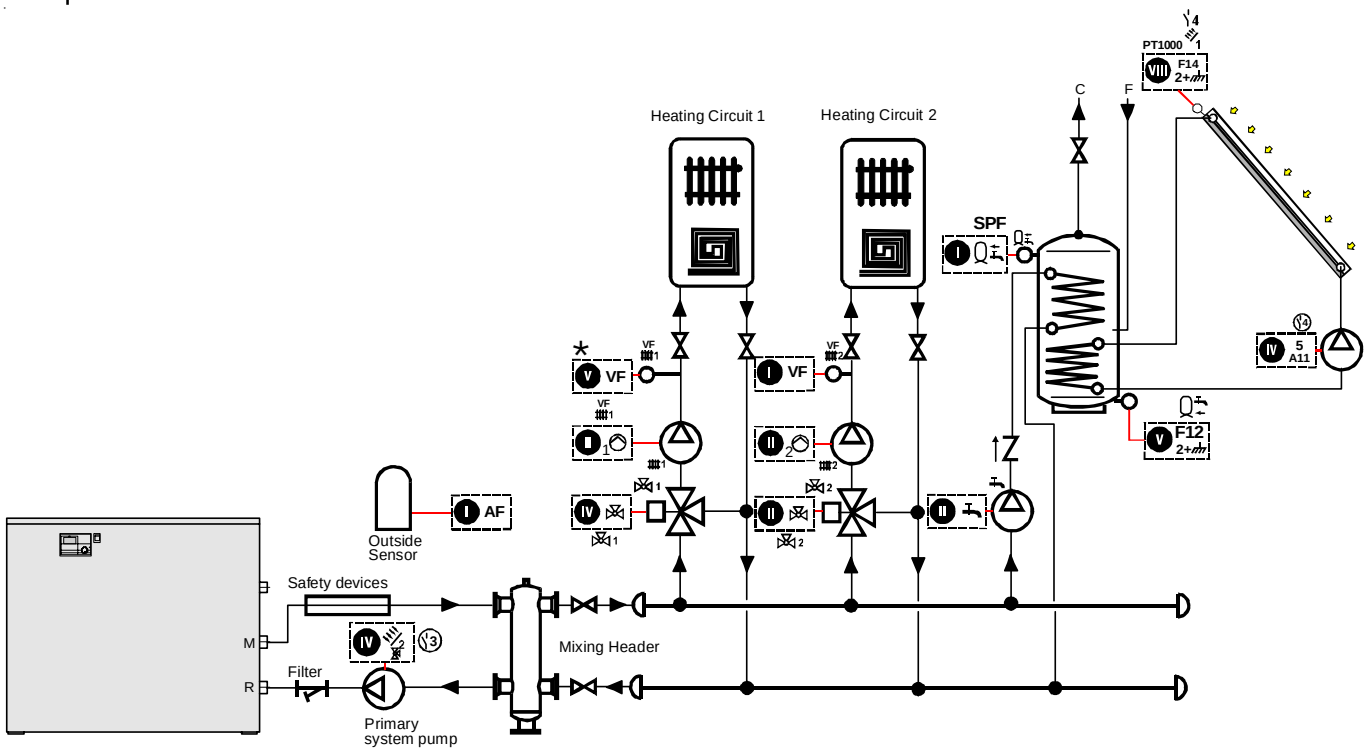

For the connection to a solar installation it is necessary to change some parameters. See Table:
Expert AREA Þ Level SOLAR / MF Þ MF 4 FUNCTION = ''23''

INSTALLATION OF A BOILER WITH CONNECTION TO TWO MIXED ZONES + D.H.W. PRODUCTION

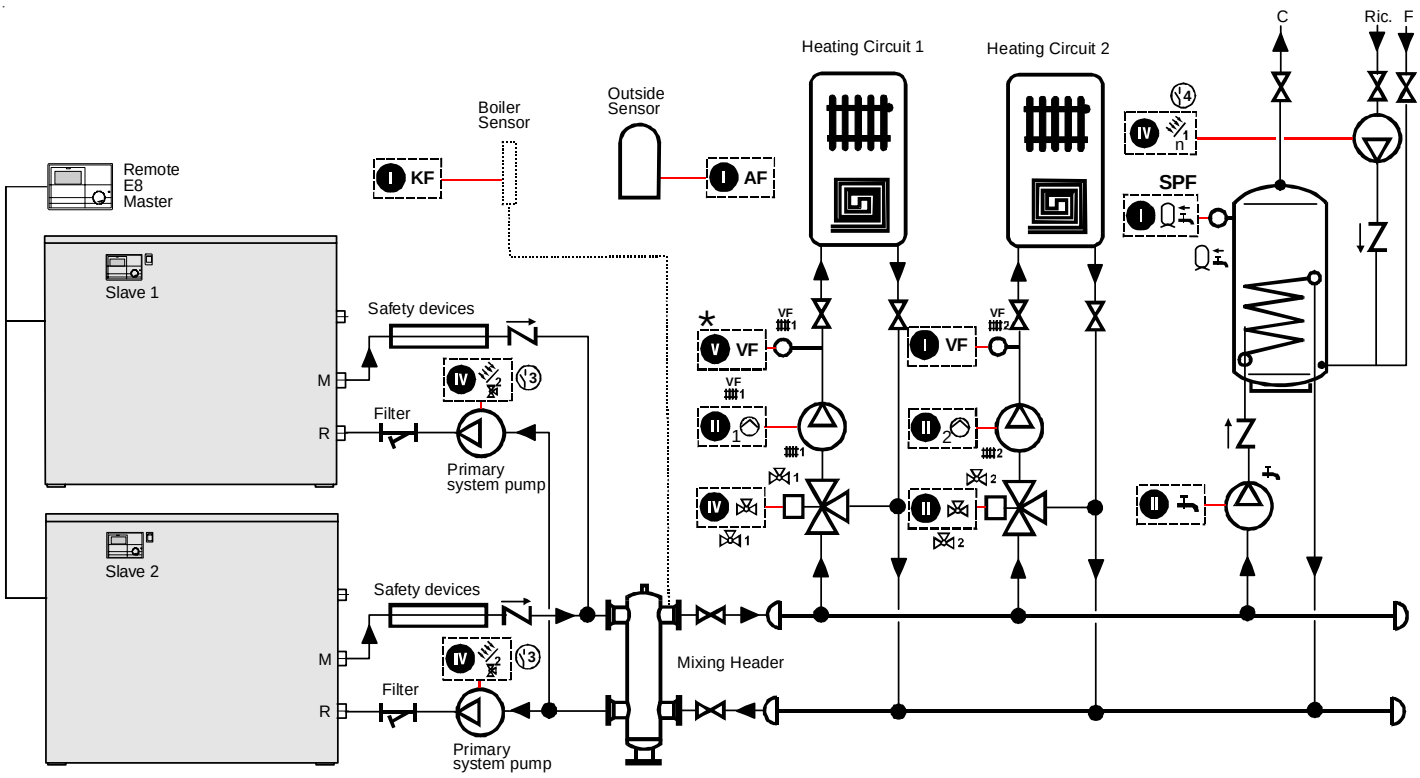

ATTENTION!
In this type of installation it is necessary to adjust, in the E8 controller, the parameter **BUS-ID HS.**

The external regulator E8 (MASTER) has to be set to:
----,
the boiler regulators E8 (SLAVES) have to be set to:
01 to 08.

Connections on to the MASTER controller
The connections of the secondary circuit have to be done on to the MASTER controller.

I VF 2 (4-5) Flow sensor heating circuit 2 (optional)
SPF (6-7) Storage tank sensor
AF (9-10) outdoor sensor

II 1 (4) Pump heating circuit 1
2 (5) Pump heating circuit 2
(6) Cylinder charging pump
2 (7) Mixer motor heating circuit 2 OPEN
(8) Mixer motor heating circuit 2 CLOSE

IV 1 (1) Mixer motor heating circuit 1 OPEN
(2) Mixer motor heating circuit 1CLOSE

n 1 (5) Re-circulation pump storage tank

2 (4) Collector pump

* *necessary for mixing valve control*

V VF 1 (1) Flow sensor heating circuit 1
I 10 (10) Ground outdoor sensor

3.25 - CASCADE MANAGER (BCM)

Application:
The BCM completes the range of functions offered by the Imax Plus boilers:
- ON/OFF alarm control
- Control of a modulating header pump with the aim of significantly increasing efficiency at low heating loads.
- Possibility of integrating the Imax Plus boilers in PLC controlled boiler plants
- Thanks to LonWorks/Modbus protocol converters been readily available also opens the road to installing Imax Plus boilers in the most advanced Building Automation Systems.

Features:
The BCM can be connected to the automation system of a boiler plant via one of its interfaces:
- eBUS: for connection to the series of E8 heating controllers or to an additional BCM
- Modbus: application in PLC controlled boiler plants

The communication protocols enable complete system management:
- Control of heating request: temperature set point and modulation level
- Monitoring of boiler operation and temperature status
- Alarm control
- Functional parameters setting

Management of the header pump:
- Relay command for running a pump at fixed rate
- 0-10 analogical output for control of a modulating pump

Special functions
Emergency: it avoids system shutdown caused by an interruption in communication with the boiler plant's automation system:
- Input for "Constant setpoint" request: 55°C, maximum output 50%
- Alarm reset input
- Alarm relay signal

Monitor:
a BCM connected to a group of heating generators managed by a E8 heating controller, automatically selects the "monitor" mode.
In this condition the following services are supplied:
- Acquisition of all the operating data and diagnostics via the Modbus interface.
- Control of the modulating pump
- Control of the Alarm relays and control of the header pump
- If the E8 malfunctions, the BCM automatically resets normal boiler operation control and can enable the emergency function previously described.

Connection for boilers in a cascade arrangement managed by a E8 heating controller with PLC supervision.

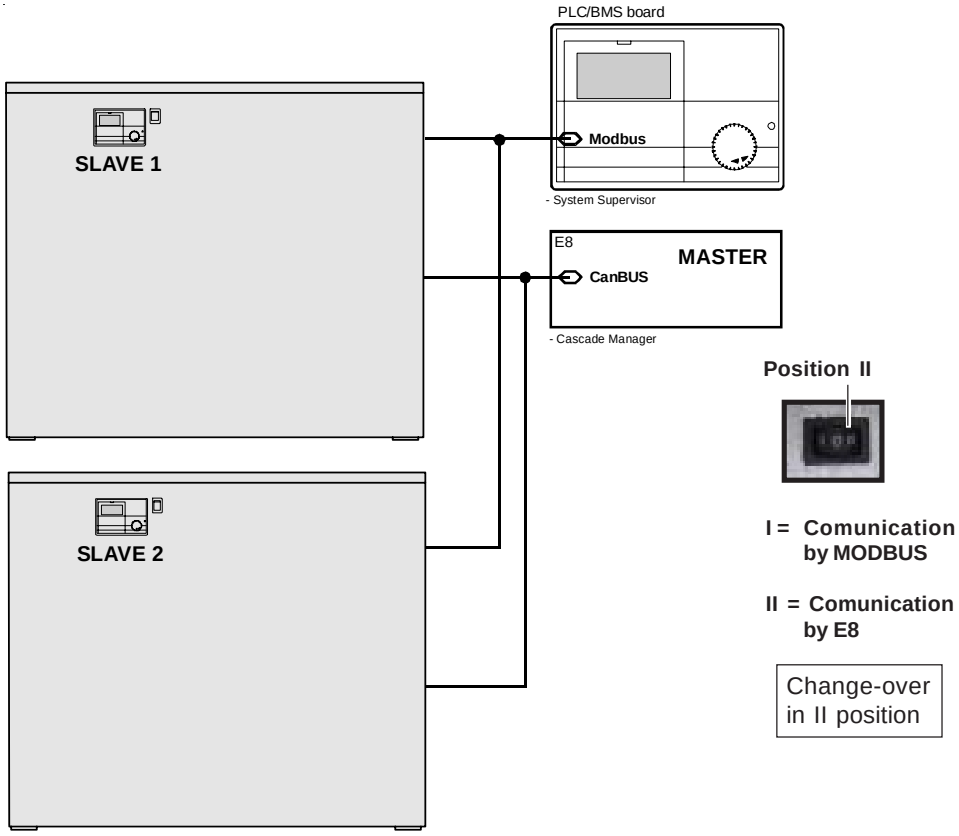

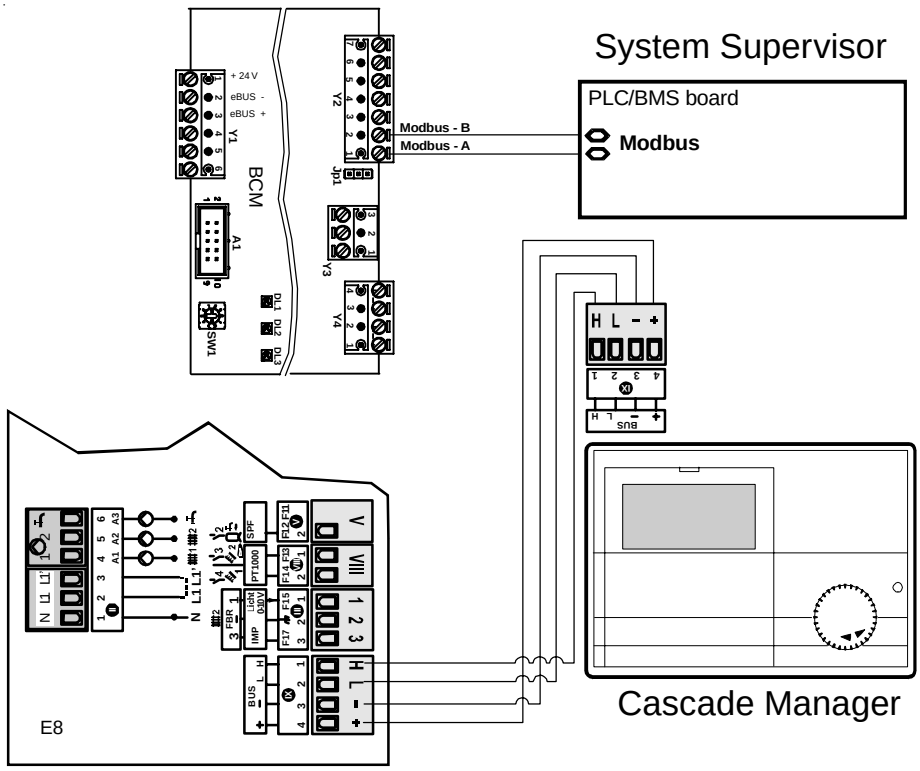

WARNING!
In this connection the **"BUS-ID HS„** parameter must be set on the E8 heating controller

The external E8 heating controller (MASTER) must be set to: - - - -,
The E8 heating controllers fitted on each boiler (SLAVE) must be set from: **01 to 08.**

Connection for boilers in a cascade arrangement connected to an external BCM and managed by PLC/BMS (E8 disconnected).

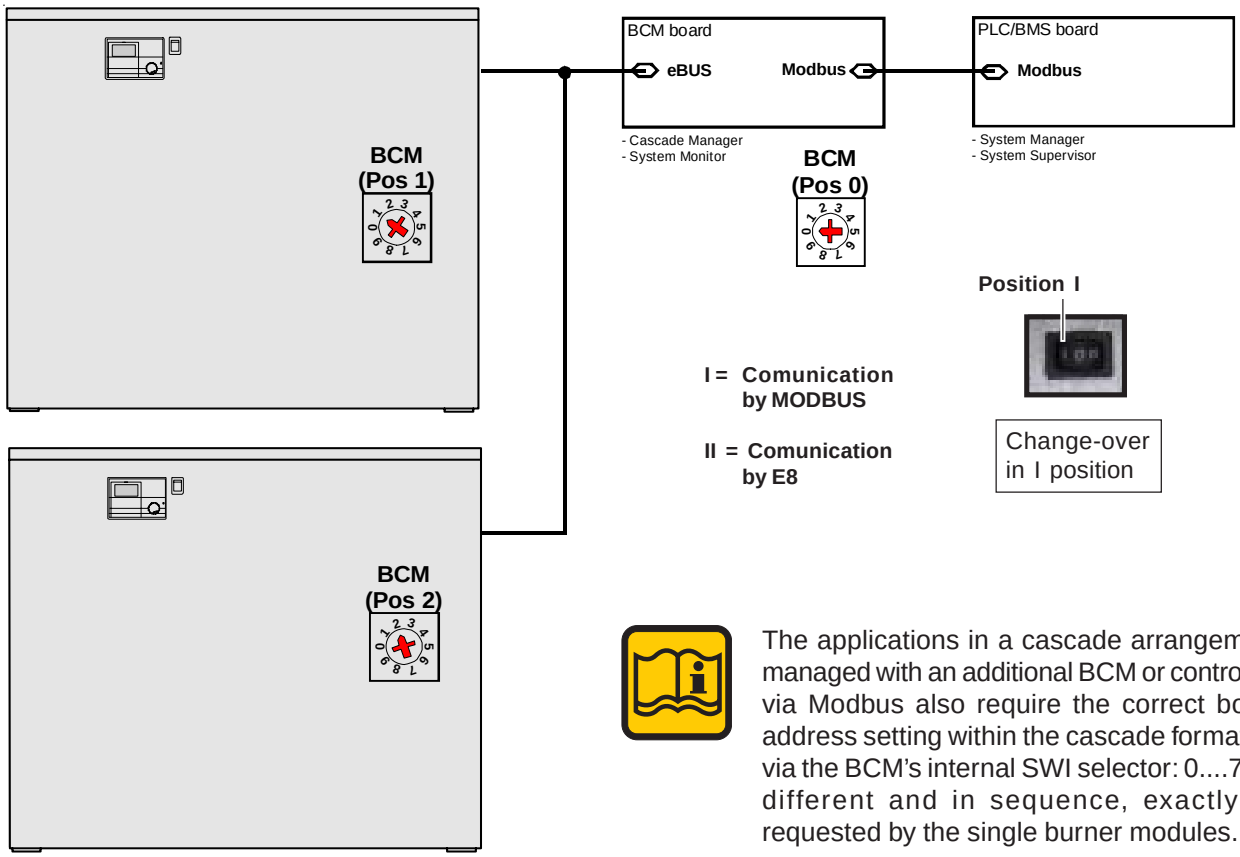

The applications in a cascade arrangement managed with an additional BCM or controlled via Modbus also require the correct boiler address setting within the cascade formation via the BCM's internal SWI selector: 0....7, all different and in sequence, exactly as requested by the single burner modules.

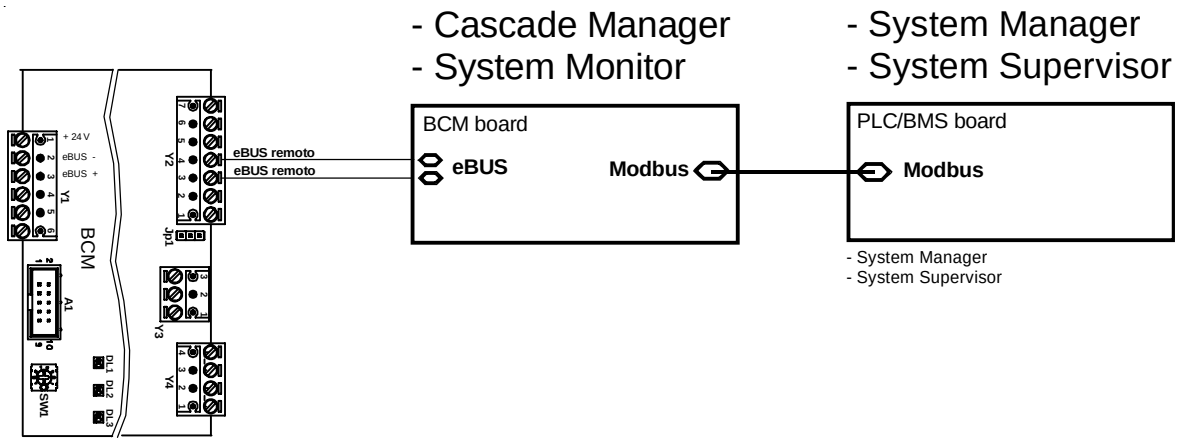

WARNING!
In this connection the E8 heating controller has to be disconnected from the eBUS on the BCM board.

Connection for boilers in a cascade arrangement managed by an external PLC (E8 disconnected)

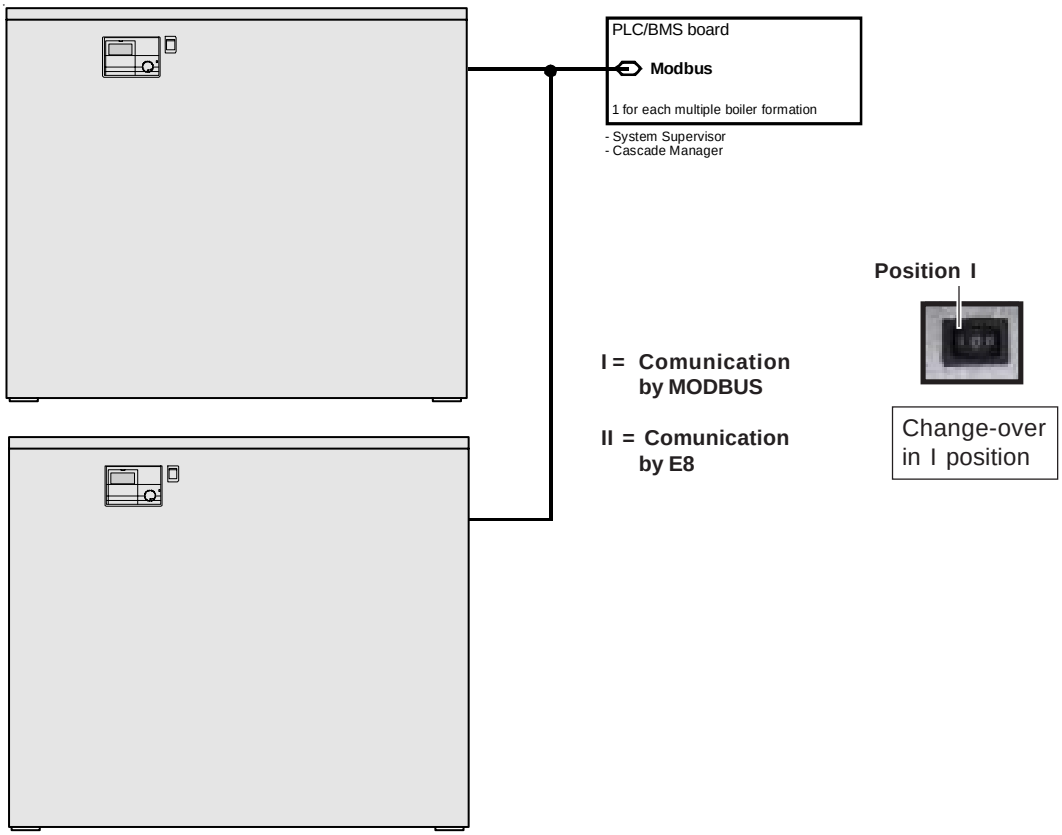

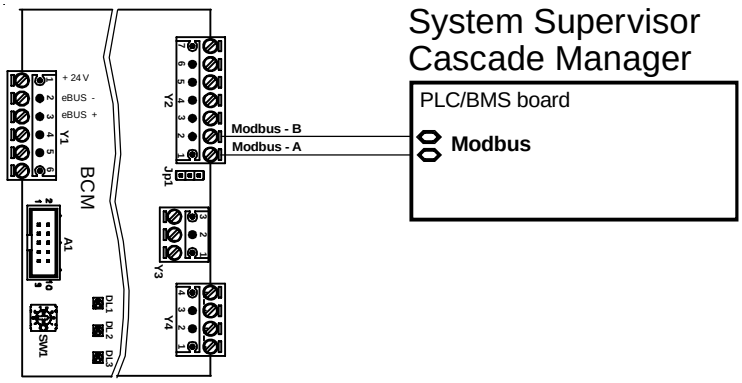

WARNING!
In this connection the E8 heating controller has to be disconnected from the eBUS on the BCM board.

3.26 - CONFIGURATION WITH A: MODULATING PUMP

MODULATING PUMP

The BCM board monitors the data of the thermal head (Dt between primary flow and return and supplied heat output). When the supplied heat output diminishes, the number of the pump's revolutions decreases and subsequently the hourly rate, maintaining the thermal head practically constant, thus obtaining a higher efficiency in condensing mode and reducing energy costs.

The 0-10 Volt modulation signal is preset to:
-3 for minimum speed
-10 Volt for maximum speed
These values can be changed according to the type of pump fitted. For further information on the 0-10 Volt signal, please also refer to the pump manual.

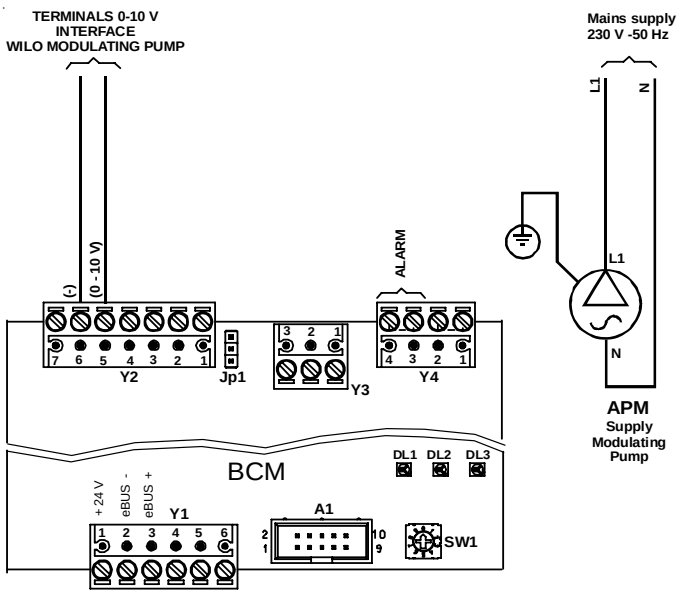

ON-OFF PUMP

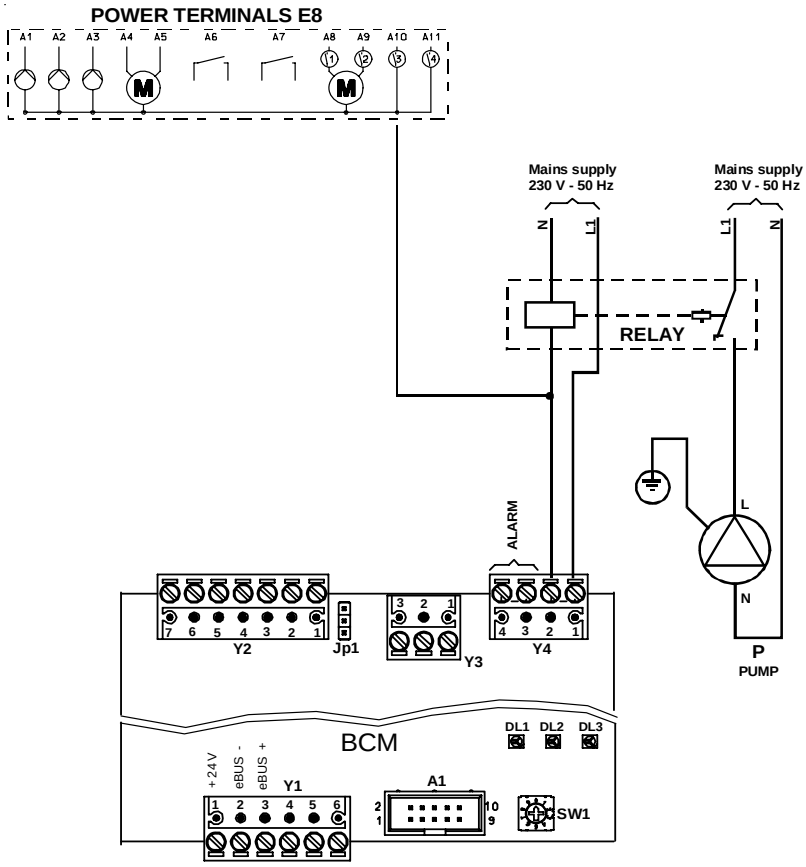

3.27 - FILLING THE SYSTEM

Warning!
Always mix the CH system water with anti-freeze or anti-corrosion solutions using the correct concentration! Failure to do so could cause damage to the washers and create noise during normal boiler operation.
Ideal Boilers refuses all liability for injury to persons, animals or damage to property resulting from not following the above mentioned recommendations.

The system itself shall be equipped with its own drain tap, whose size depends on the system capacity. The fitting of a filter on the return pipe to the boiler is advisable.

3.28 - BURNER ADJUSTMENT

WARNING!

All the instructions indicated below are for the exclusive use of qualified Ideal Boilers service technicians or installers.

All the boilers are supplied already calibrated and tested.

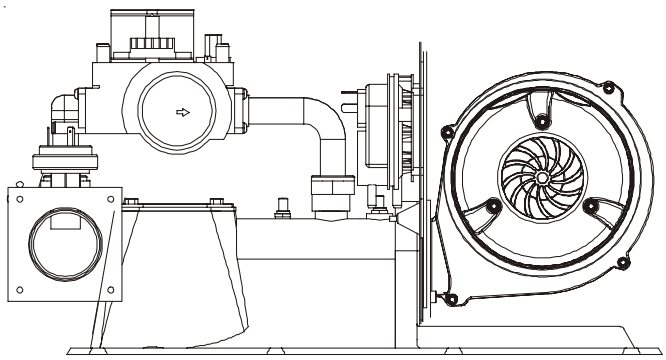

A) MAXIMUM OUTPUT ADJUSTMENT

- Remove the cap of the combustion gases sampling point
- Connect a suitable $C0_2$ gas analyser to the sampling point in the flue outlet terminal.
- Force the desired burner to be working at nominal output (CASCADE MAN 100%)
- Check that the $C0_2$ values are within the values indicated in the table "Burner pressures"
- If necessary correct the value by turning the adjustment screw "A" in a CLOCKWISE direction to decrease the value and in an ANTICLOCKWISE direction in order to increase it.

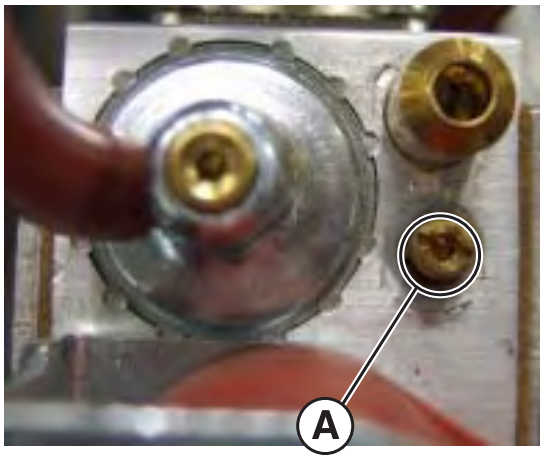

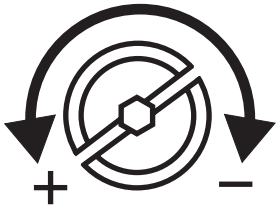

MAXIMUM OUTPUT ADJUSTMENT SCREW

Flue sampling point

B) MINIMUM OUTPUT ADJUSTMENT

- Force the desired burner to be working at minimum output (CASCADE MAN 10%)
- Check that the $C0_2$ values are within the values indicated in the table "Burner pressures"
- If necessary correct the value by turning the adjustment screw "B" in a CLOCKWISE direction to increase the value and in an ANTICLOCKWISE direction in order to decrease it.

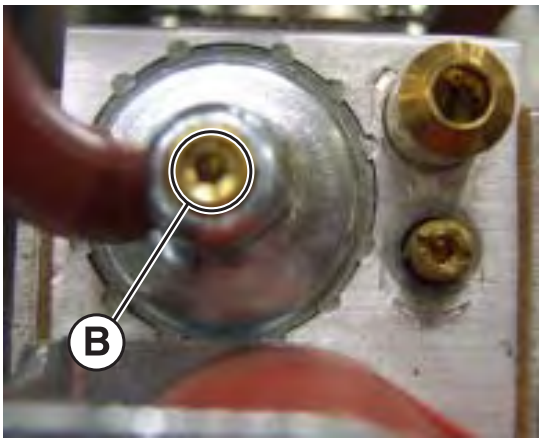

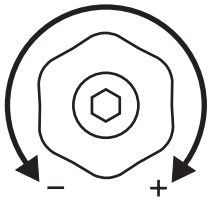

MINIMUM OUTPUT ADJUSTMENT SCREW

Follow this procedure also for the other burners

If the CO_2 percentage is too low, check if the air and flue ducts are not obstructed. If they are not obstructed, check if the burner and/or the exchanger (aluminium sections) are well cleaned.

C) COMPLETION OF THE BASIC ADJUSTMENTS

- Check the $C0_2$ values at the minimum and maximum outlet
- If necessary make the required adjustments

To ensure correct operation the $C0_2$ values have to be adjusted with extreme care respecting the values indicated in the table.

- Close the sampling test point in the flue outlet terminal

Do not force the end switches of the adjusting screw.

In case of gas valve replacement or difficult ignition:

Tighten the maximum adjustment screw "A" in a clockwise direction until you arrive to the abutting end, than slacken for 7 turns. Verify the boiler ignition; if the boiler goes into lockout slacken the screw "A" again of one turn, than retry the ignition. If the boiler goes into lockout again, carry out the above indicated operations until the boiler is lighted.
At this point carry out the burner adjustment as previously indicated.

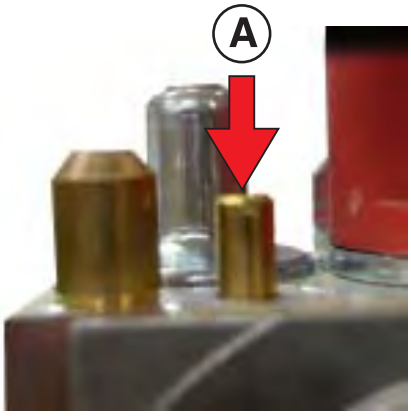

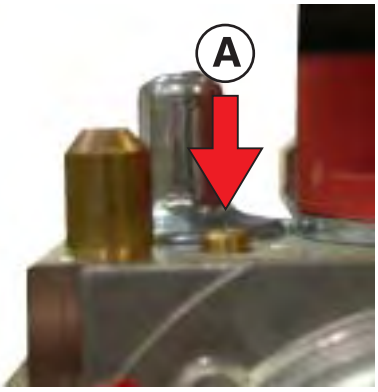

INJECTORS – PRESSURES

Check the $C0_2$ levels often, especially at low flow rate

	Gas type	Supply pressure (mbar)	Ø Injectors (mm)	Diaphragm	Fan speed		CO_2 levels (%)		Starting power IG (%)
					min (rpm)	max (rpm)	min	max	
Imax Plus 90 - 145 - 190 235 - 285 - 330	Nat. gas (G20)	20	9,6	conic	1920	5400	8,8	9,0	75

SERVICE MODE FUNCTION

Before open the operating flap turn clock-wise Shaft encoder, to symbol

Open the operating flap, displayed

DISPLAY → Turn **anticlok-wise** → GENERAL → After 2 sec is displayed level → DATA/TIME → Turn **anticlok-wise** → **SERVICE** → Press to open the level

RELAY TEST

Turn **clok-wise** → **SENSOR TEST**

OTHER ENTRIES → Press to open the level → SW NO XXXX → Turn **clok-wise** → CASCATA MANU → Press to open the level

BOILER 01 - 00% → BOILER 01 - 100%

CHANGE PER CENT 0 % = MIN TO 100% = MAX

BOILER 02 - 00%
BOILER 03 - 00%
BOILER 04 - 00%
BOILER 05 - 00%
BOILER 06 - 00%
BOILER 07 - 00%
BOILER 08 - 00%

ATTENTION!
The chimney sweeper mode remains active for 15 minutes. Past this period, the standard parameter will be restored.
Repeat this operation for each burner:
BOILER 01
BOILER 02
BOILER 03
BOILER 04
BOILER 05
BOILER 06
BOILER 07

3.30 - EMERGENCY FUNCTIONS

It avoids system shutdown in case the main boiler plant's system management is out of use.

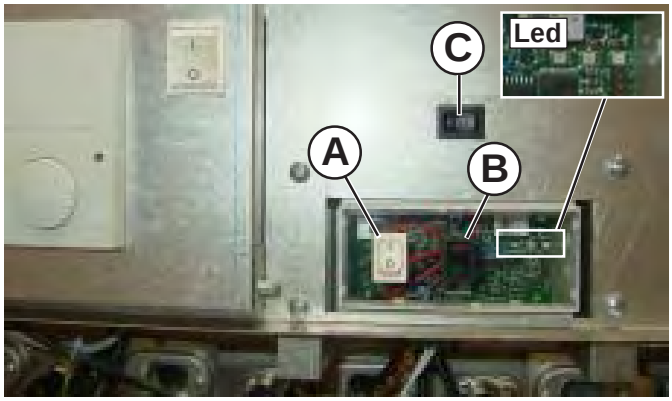

(A) In position I the plant will operate when requested at "CONSTANT SETPOINT": 70°C – Max heat output 50%

(B) Enables burner reset in case of lock-out

Yellow LED = Blinking (communication between BMM and BCM) OK

Green LED = ON (Active Pump)

Red LED = ON (Failure code detected)

(C) Change-over Series/Parallel
- **0 = Emergency is active**
- **I = Series connection (the cascade is managed by the BCM)**
- **II = Parallel connection (the cascade is managed by the E8)**

Only for Imax Plus 330

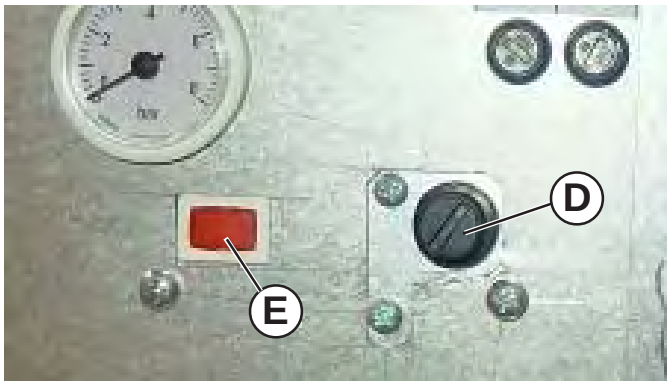

(D) Only for Imax Plus 330
TLG General Limit Thermostat: when it acts, it cuts the power supply to the boiler, the warning lamp E lights. To reset, remove the cap and push the reset button.

(E) Only for Imax Plus 330
Warning lamp of the thermostatic lockout of TLG

Relay condensate level sensor (positioned behind manometer)

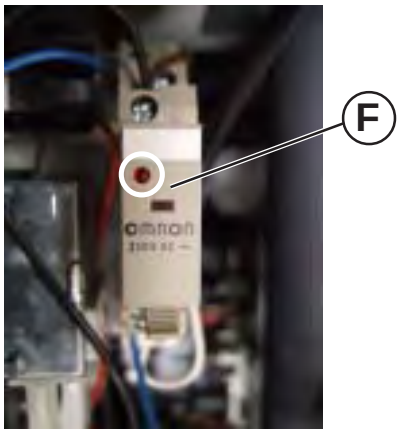

(F) Relay of the condensate level sensor: when the led is Off it means every thing is OK; when the led is On it means that the condensate level sensor has cut the power supply to the boiler, and the boiler stays Off till the level of the condensate decreases under a certain level.

Condensate level sensor position

Note: The switches are positioned under the front panel.

Note: The emergency function enables the boiler's burners to fire only at 50% and at 70°C in system return. All the system's heating loads, including the header pump, must be controlled manually.

3.31 INITIAL LIGHTING

PRELIMIARY CHECKS

The first ignition must be carried out by a qualified technician. Failure to do so could cause injury to persons, animals or damage to property. Ideal Boilers shall not be held liable for any injury and/or damage.

Before lighting the boiler check that:

- the boiler installation has been carried out in accordance with the specific Standards.
- the combustion air inlet and the discharge of the products of combustion occur in the correct way in accordance to the specific Standards in force;
- the gas supply system is correctly dimensioned for the boiler's output;
- the boiler's electrical supply is 230 V - 50 Hz;
- the system has been filled with water (pressure registered on the gauge 0,8/1 bar with pump not running);
- all of the system's on-off valves are open;
- the gas supply cock is open;
- there are no gas leaks;
- the external mains supply switch is on;
- the boiler system's safety valve is not blocked and that it is connected to the sewage system;
- the condensate drain trap has been filled with water and that it is connected to the sewage system;

DANGER!
Before firing the appliance fill up the trap through the filling hole and check the correct drainage of the condensate.
If the appliance is used with the condensate drain trap empty, this could cause poisoning caused by the leakage of the flue gasses.

- there are no water leaks;
- all the necessary ventilation conditions and minimum clearance distances are guaranteed for subsequent servicing in case the boiler is sited in a cupboard compartment.

Information to be passed on to the user

The user of the appliance must be instructed on the use and operation of his boiler and in particular detail:

- Hand over to the end user the booklet: "USER'S INSTRUCTIONS GUIDE", as well as all the other literature relative to the appliance and placed in the envelope contained in the packaging. **The user of the appliance must retain this literature for any future reference.**
- Inform **The user** of the importance of the air vents and of the flue outlet system, stressing the fact that absolutely no alteration can be made.
- Inform the user regarding the control of the system's water pressure and how to restore it to the correct value.
- Explain and demonstrate to **The user** the correct function and adjustment of the temperature, thermostats and radiators for the economic use of the system.
- Remind the user that in order to comply to the regulations in force the boiler has to be inspected and serviced regularly as indicated by the manufacturer.
- If the appliance is sold or transferred to another owner or if the present user moves home and leaves the appliance installed, ensure yourself that the manual always follows the appliance so that it can be consulted by the new owner and/or installer.

4 SERVICING SCHEDULE

To ensure the continued safe and efficient operation of the boiler it is highly recommended that it is checked at regular intervals and serviced when necessary, and that only original spare parts are used.

If the boiler is not checked and serviced when necessary it could cause material and personal damages.

For this reason Ideal Boilers recommends that a servicing contract should be made with a heating installer.

The regular inspection is useful to determine the actual state of an appliance and to compare it with an optimum state. This is achieved through measurement, control and observation.

The service is necessary to eliminate eventual deviations of the actual state from the optimum state. This is normally done through the cleaning, the parameters setting and the eventual replacement of single components subject to mechanical wear.

The frequency of servicing will be determined by the service engineer and will depend on appliance's state of condition.

INSTRUCTIONS FOR SERVICING

To ensure a long life to all your boiler components and in order not to alter the conditions of the approved product only original Ideal Boilers spare parts must be used.

After having carried out all the necessary maintenance, always follow these steps:

- Switch OFF the main switch
- Isolate the boiler from mains via a device having, at least, a 3 mm in the switch contacts (e.g.: safety devices or power switches) and make sure it cannot be switched ON accidentally.
- Switch off the gas gate valve upstream the boiler.
- If necessary, and in function of the type of work to be carried out, close any on-off valves fitted on the CH flow and return pipes, as well as the cold inlet valve.
- Remove the appliance's front panel.

After maintenance works have been finished, follow the next steps:

- Open the CH flow and return valves as well as the cold inlet valve (if previously closed),
- Purge and, if necessary, proceed with restoring the heating system's pressure until a pressure of 0,8/1 bar is reached.
- Open the on-off gas valve.
- Reconnect the appliance to the electrical supply and switch on the mains electrical supply.
- Test for gas soundness, on the gas side and on the water side.
- Replace the appliance's front panel..

TABLE OF THE RESISTANCE VALUES IN FUNCTION OF THE HEATING SENSOR (SR) AND RETURN HEATING SENSOR TEMPERATURE (SRR)

T°C	0	1	2	3	4	5	6	7	8	9
0	32755	31137	29607	28161	26795	25502	24278	23121	22025	20987
10	20003	19072	18189	17351	16557	15803	15088	14410	13765	13153
20	12571	12019	11493	10994	10519	10067	9636	9227	8837	8466
30	8112	7775	7454	7147	6855	6577	6311	6057	5815	5584
40	5363	5152	4951	4758	4574	4398	4230	4069	3915	3768
50	3627	3491	3362	3238	3119	3006	2897	2792	2692	2596
60	2504	2415	2330	2249	2171	2096	2023	1954	1888	1824
70	1762	1703	1646	1592	1539	1488	1440	1393	1348	1304
80	1263	1222	1183	1146	1110	1075	1042	1010	979	949
90	920	892	865	839	814	790	766	744	722	701

Relation between the temperature (°C) and the nom. resistance (Ohm) of the heating sensor SR and the return heating sensor SRR.

Example: At 25°C, the nominal resistance is 10067 Ohm
At 90°C, the nominal resistance is 920 Ohm

Servicing schedule

We recommend that periodical service is made by qualified technical personnel according to the frequency stated by national rules in force.

As much as the dust present in the air will be sucked inside the combustion chamber, the flue side resistance will increase, which, finally, will result in a reduced heat input (and consequently a reduced output).Before cleaning the boiler body sections, check the boiler input and the CO_2 percentage (see 2.3).

Note! A reduction of the input can be caused by the obstruction of the evacuation duct or of the air intake. Check, first of all, that this is not the reason.

If the actual input (with the correct CO_2) is within 5% of the value shown in the chapter 2.3, the boiler does not need to be cleaned.The operation then, can be limited to the cleaning of the trap.

1st phase - Disassembly

- Switch off power and gas supply **and ensure the gas cock is closed.**
- Unscrew the coupling at the gas inlet.
- Remove the front, rear and top panels of the casing.
- After the removal of **"B"** screws, remove the cover **"A"** of the fan chamber.

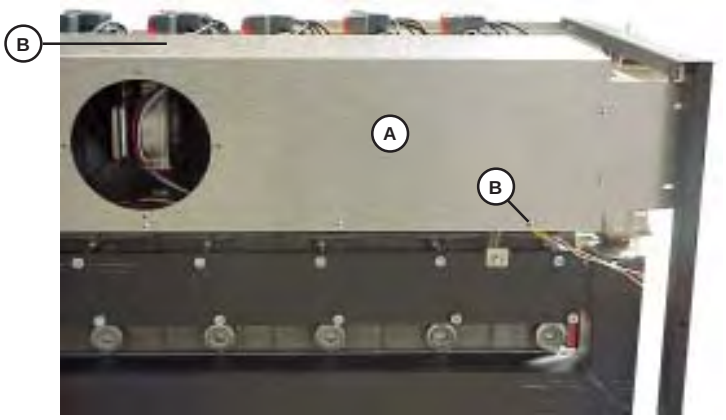

- Remove the air filters

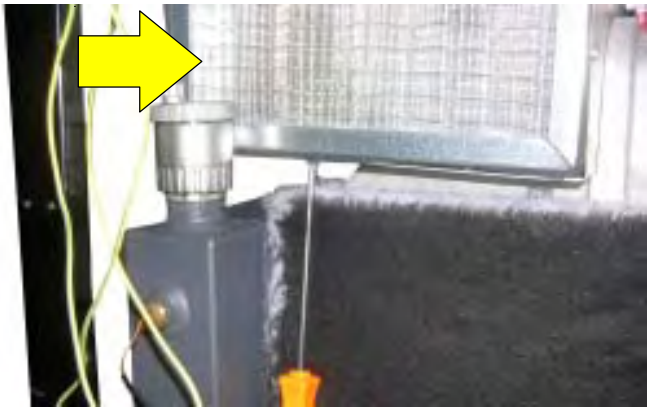

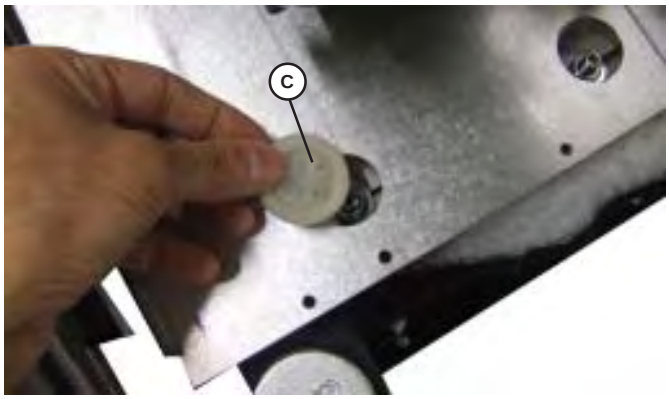

- Remove the grommets **"C"** from the bottom of the fan chamber to get access to the screws fixing the burner covers.

- Remove the screws **"D1 – D2 – D3"**, fixing the burner covers, with a 13 mm socket wrench, **- D4** (with a 6mm hexagonal key)**"**

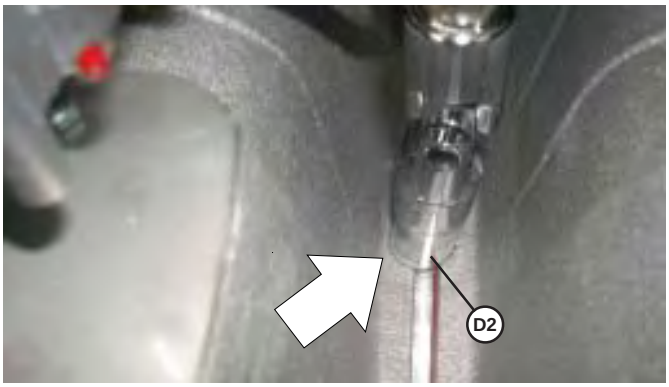

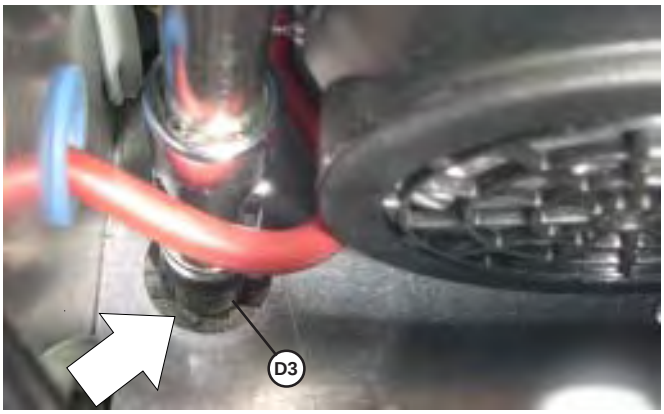

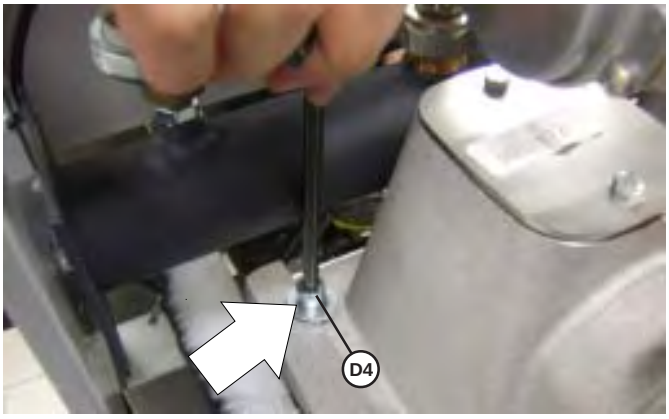

- Remove the **"E"** fixing screws on the two sides of the burner manifold.
- Remove the sheet metal protections **"F"** on the two sides of the burner manifold.

- Fix the burner manifold, at the two sides, in a position 10 mm higher than the standard one. It is possible to get this by aligning the tapped hole of the gas pipe flange with the hole **"G"** in the side support and inserting one of the two screws **"E"** previously removed (see the following pictures and drawing).

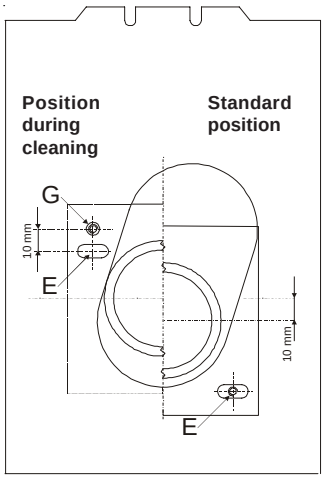

- Bring up the fan group **"L"** by rotating it on the gas manifold axis and keep it up by inserting he stings **"I"**, fixed to the frame, in the holes **"M"** (see next page)**.**

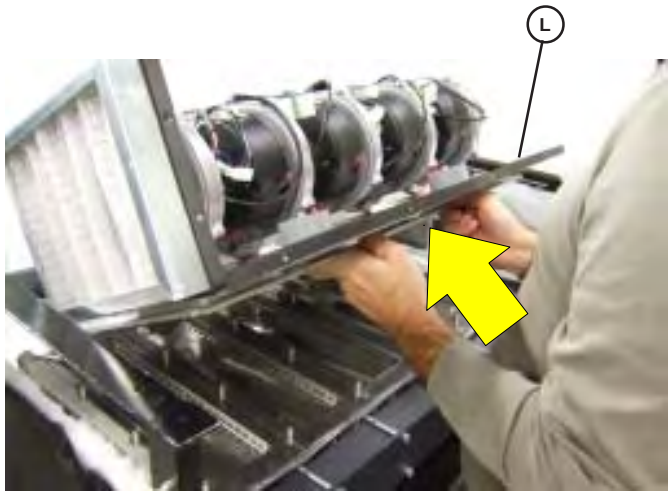

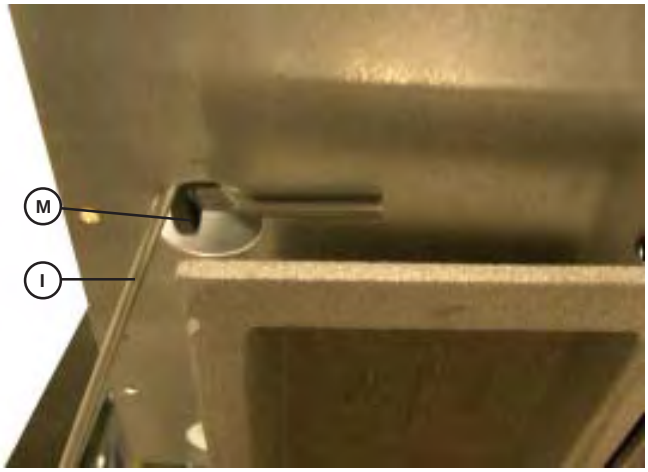

Second phase - Cleaning

- Remove the gaskets and the burners.
- Perform cleaning of the burners by blowing, with compressed air, from the flame side of the burner.
- Verify visually the state of the spot weldings of the L profiles and the burner mesh.

The burner gaskets must be replaced at every cleaning operation.

back side

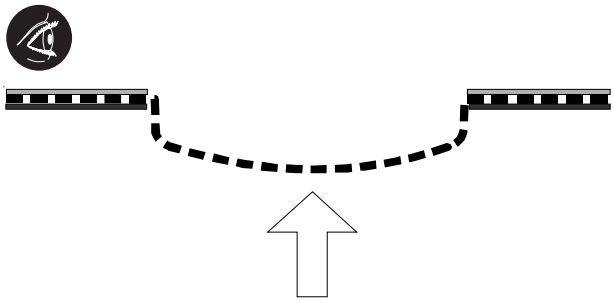

Compressed air

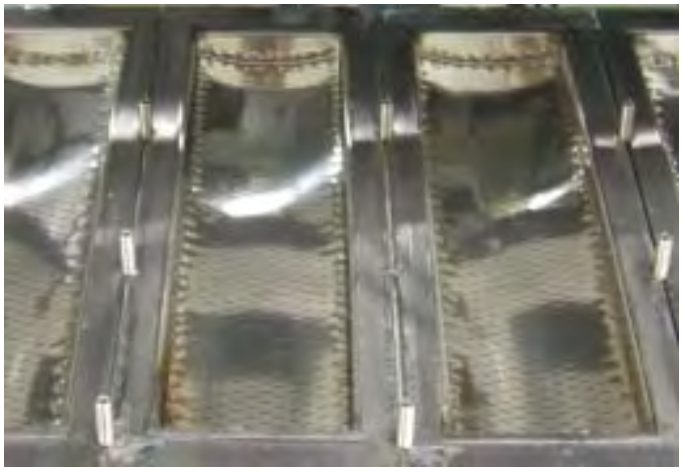

- Wash with water the combustion chamber, avoiding wetting any electrical harness or electrodes.
  During this operation it will be necessary to ascertain that the condensate drain pipe is free, so that the washing water does not come out of the inspection hole.
- Blow the combustion chamber with compressed air, trying to remove all the dirt still fixed to the fins.
- Once the washing of the aluminium sections is finished, make sure the trap for the evacuation of the condensate is clear: if necessary clean it
- Inspect the flue evacuation pipe and the chimney

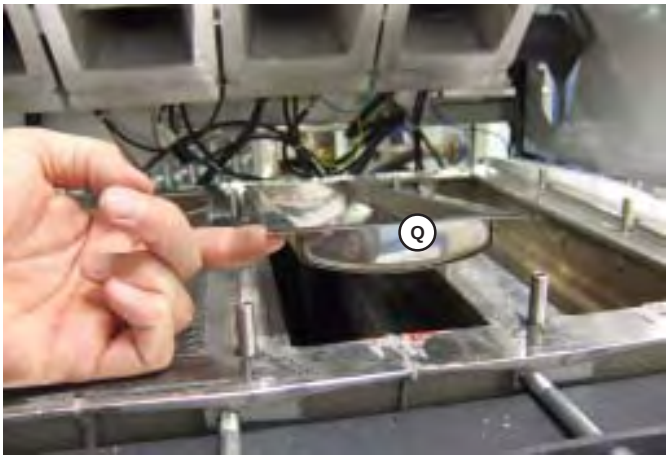

- After the cleaning of the boiler body and/or the burners, re-position the burners “Q” in their seats.

Third phase – Reassembly

- Position the new gaskets in **graphite** “R”

When reassembling, proceed in the reverse order, taking care to tighten the fixing screws of the mixer/fan group to the body, with a tightening torque of 13 Nm

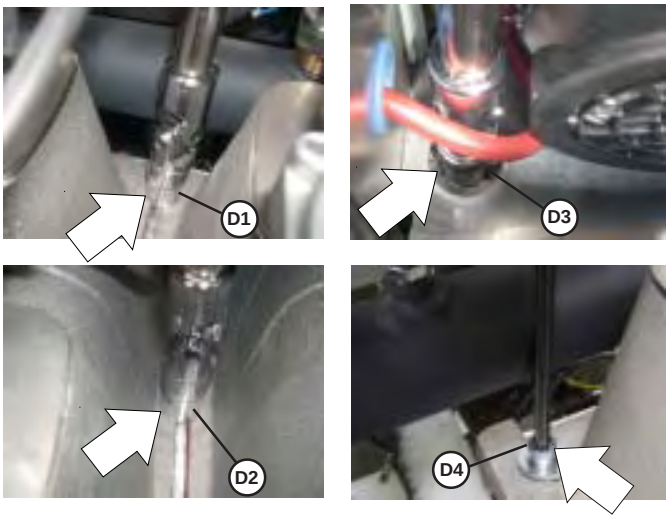

WARNING
AT EACH MAINTENANCE OPERATION IT IS COMPULSORY TO REPLACE THE SEALING GASKETS ON EACH BURNER.

- Before lighting the boiler make sure the trap has been filled with water.
- Before opening the gas cock, previously loosened, make sure it is tight. To do this open the gas cock and check with a leak detection fluid.
- When a single burner has started, check immediately for the soundness between its gas valve and the relevant premixing chamber.
- Perform the combustion analysis and check its parameters.
- Make sure that all the pressure test nipples, previously opened, have been closed.

NOTE:

NOTE:

Technical Training

The Ideal Boilers Technical Training Centre offers a series of first class training courses for domestic, commercial and industrial heating installers, engineers and system specifiers. For details of courses please ring: 01482 498 432

Ideal Boilers, P.O. Box 103, National Ave, Kingston upon Hull, HU5 4JN. Telephone: 01482 492 251 Fax: 01482 448 858. Registration No. London 322 137.

Ideal Stelrad Group pursues a policy of continuing improvement in the design and performance of its products. The right is therefore reserved to vary specification without notice.

Ideal BOILERS
The High Efficiency Pioneers

Ideal Stelrad Group

Ideal Installer/Technical Helpline: 01482 498 376
www.idealboilers.com